KEY NOTES

1. PROVIDE/INSTALL NEW CIRCUIT BREAKER IN EXISTING SPACE. NEW CIRCUIT BREAKER SHALL BE COMPATIBLE WITH THE EXISTING MAIN SWITCHBOARD "DB". A1
2. PROVIDE/INSTALL CIRCUIT BREAKER MOUNTING KIT.

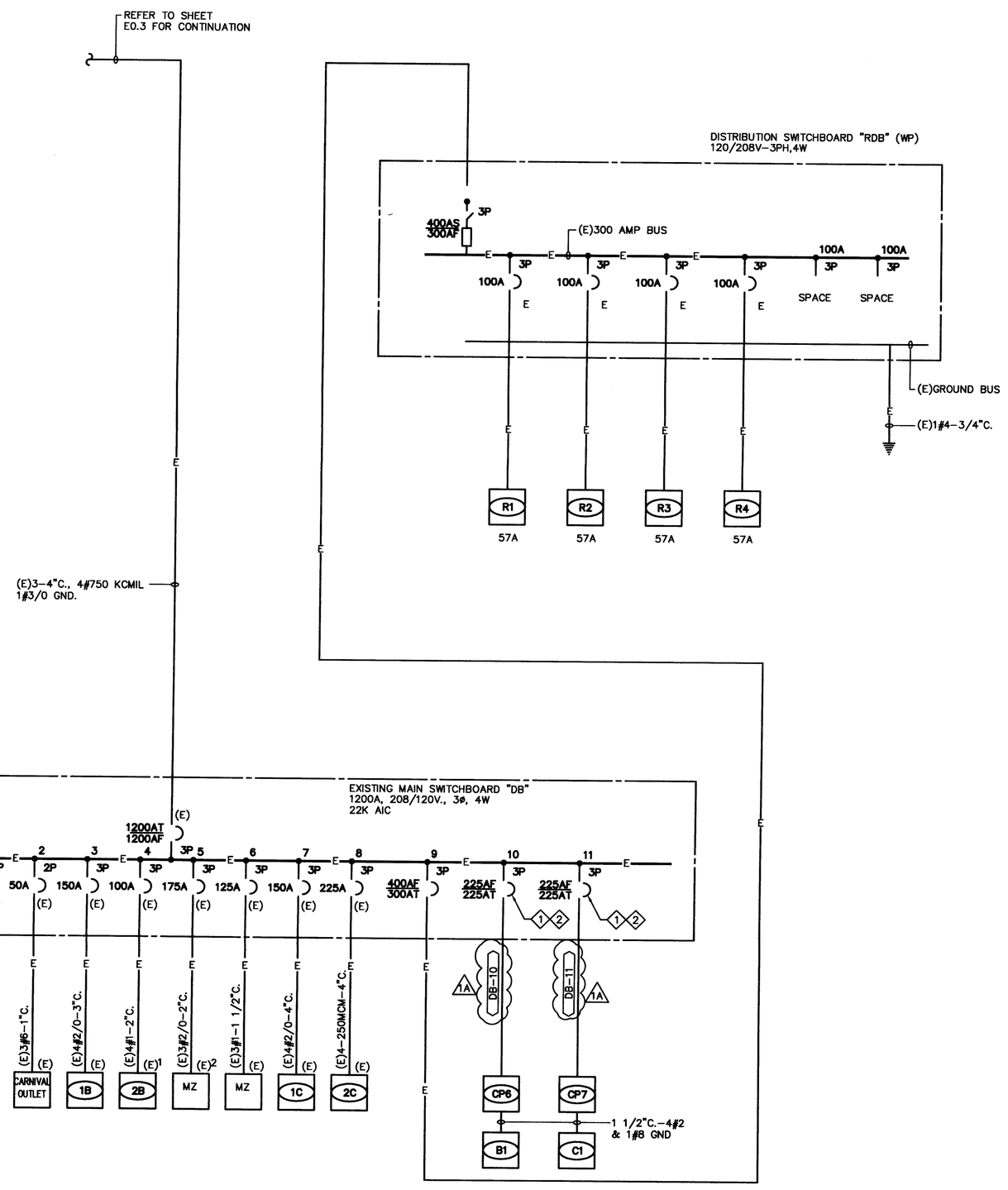

LOAD SUMMARY AND FEEDER SCHEDULE " DB " (EXISTING)

VOLTAGE 205/120V,3ø,4W. 22,000 AIC SYM

LOCATION ELECTRICAL ROOM 1200 AMP BUS 1200 MAIN C.B.

FEEDER NUMBER	FROM	TO	FEEDER SIZE (BASED ON THW COPPER)	CONNECTED LOAD AMPS.	CONNECTED LOAD K.V.A.	%VD	REMARKS
			EXISTING LOAD	528.0	190.1	–	–
A1 DB-10	DB	CP6	2 1/2"C., 4#4/0, 1#4 GND.	121.7	43.8	–	–
DB-11	DB	CP7	2 1/2"C., 4#4/0, 1#4 GND.	115.0	41.4	–	–
			SUBTOTAL	764.7	275.3		
			25% OF LARGEST MOTOR	–	–		
			TOTAL LOAD	764.7	275.3		

T M A D Engineers, Inc
Consulting Mechanical & Electrical Engineers

ELECTRICAL CALCULATION

A. EXISTING CONNECTIONS = 834.5 KVA

B. NEW ADDITIONAL LOAD = 44.8 KVA

TOTAL LOAD = 879.3 KVA

I = 2442.5AMP. @ 208/120V., 3ø, 4W

∴ EXISTING 3000 AMPS. MAIN SWITCHBOARD "MSB" IS TILL ADEQUATE.

N:\20.CAD\TTG_Projects\2008\2008-125-00\Muir\E0-4.dwg 01/19/2012

SANTA ANA UNIFIED SCHOOL DISTRICT

gkkworks
2355 Main Street Suite 220
Irvine | CA 92614
949 250 1600
949 955 2708 fax

Architect Seal

LICENSED ARCHITECT GUILLERMO AGUILAR NO. C13165 REN.: MAY. 2013 STATE OF CALIFORNIA

Consultant and Seal

TTG • STRUCTURAL • MECHANICAL • ELECTRICAL • CIVIL
TMAD TAYLOR & GAINES
901 Via Piemonte, Suite 400
Ontario, California 91764
Phone: 909.477.6915 Fax: 909.477.6916
www.ttgcorp.com Project No. 2008.125.00

REGISTERED PROFESSIONAL ENGINEER NESTOR C. IGNACIO Lic. E16934 Exp. 6-30-2013 ELECTRICAL STATE OF CALIFORNIA

Agency Approval

IDENTIFICATION STAMP
DIV. OF THE STATE ARCHITECT
APPL. 04-110031
AC _____ FLS _____ SS _____
DATE _____

No.	Date	Revision/Issue
	12/08/08	DSA SUBMITTAL
	02/11/09	DSA SUBMITTAL
	5/11/09	DSA BACKCHECK
1A	12/15/2011	CONSTRUCTABILITY REVIEW

Project Name

MUIR FUNDAMENTAL SCHOOL MODERNIZATION
1951 MABURY ST.
SANTA ANA, CA 92707

Checked By: RA
Drawn By: JHC

Sheet Title

SINGLE LINE DIAGRAM

Sheet Number

E0.4

Project Number: 10021-010
Scale: NONE

© 2012 gkkworks, All Rights Reserved
NO PART OF THE CONTENTS OF THIS DOCUMENT MAY BE REPRODUCED OR TRANSMITTED IN ANY FORM OR BY ANY MEANS WITHOUT THE WRITTEN PERMISSION OF GKKWORKS.