N:\20.CAD\TTG_Projects\2008\2008-125-00\Mpe\E0-1.dwg 01/19/2012

GENERAL NOTES EDUCATIONAL/STATE

SCHOOL EQUIPMENT ANCHORAGE NOTES

1. EQUIPMENT ANCHORAGE NOTE:

ALL MECHANICAL AND ELECTRICAL EQUIPMENT SHALL BE ANCHORED OR BRACED TO MEET THE HORIZONTAL AND VERTICAL FORCES PRESCRIBED IN THE 2007 CBC, SECTION 1614A.1.13 AND ASCE 7-05 SECTIONS 13.3, 13.4 13.6, AND CHAPTER 6.

THE ATTACHMENT OF THE FOLLOWING ITEMS SHALL BE DESIGNED TO RESIST THE FORCES PRESCRIBED ABOVE, BUT NEED NOT BE DETAILED ON THE PLANS. THE PROJECT INSPECTOR WILL VERIFY THAT THESE ITEMS HAVE BEEN ANCHORED:

A. EQUIPMENT WEIGHING LESS THAN 400 POUNDS SUPPORTED DIRECTLY ON THE FLOOR OR ROOF.
B. FURNITURE REQUIRED TO BE ATTACHED IN ACCORDANCE WITH ASCE 7-05 SECTION 13.5.
C. TEMPORARY OR MOVABLE EQUIPMENT WITH FLEXIBLE CONNECTION TO POWER OR UTILITIES.
D. EQUIPMENT WEIGHING LESS THAN 20 POUNDS SUPPORTED BY VIBRATION ISOLATORS.
E. EQUIPMENT WEIGHING LESS THAN 20 POUNDS SUSPENDED FROM A ROOF OR FLOOR OR HUNG FROM A WALL.

FOR THOSE ELEMENTS THAT DO NOT REQUIRE DETAILS ON THE APPROVED DRAWINGS, THE INSTALLATION SHALL BE SUBJECT TO THE APPROVAL OF THE MECHANICAL/ELECTRICAL ENGINEER AND THE FIELD REPRESENTATIVE OF THE DIVISION OF THE STATE ARCHITECT.

2. PIPING, DUCTWORK, AND ELECTRICAL DISTRIBUTION SYSTEM BRACING NOTE:

PIPING, DUCTWORK, AND ELECTRICAL DISTRIBUTION SYSTEMS SHALL BE BRACED TO RESIST THE FORCES PRESCRIBED IN ASCE 7-05 SECTION 13.3 AS DEFINED IN ASCE 7-05 SECTION 13.6.8, 13.6.7, AND 13.6.5.5, ITEM 6, AND 2007 CBC 1614A.1.13.

THE BRACING AND ATTACHMENTS TO THE STRUCTURE SHALL COMPLY WITH ONE OF THE OSHPD PRE- APPROVALS WITH AN OPA #, SUCH AS MASON INDUSTRIES (OPA 349), OR ISAT (OPA 485) AS MODIFIED TO SATISFY ANCHORAGE REQUIREMENTS OF ACI 318, APPENDIX D.

COPIES OF THE MANUAL SHALL BE ON THE JOBSITE PRIOR TO STARTING HANGING AND BRACING OF THE PIPE, DUCTWORK, AND ELECTRICAL DISTRIBUTION SYSTEMS.

THE STRUCTURAL ENGINEER OF RECORD SHALL VERIFY THE ADEQUACY OF THE STRUCTURE TO SUPPORT THE HANGER AND BRACE LOADS.

3. ANCHORAGE DETAILS FOR EQUIPMENT WHICH ARE NOT APPROVED DURING PLAN REVIEW ARE SUBJECT TO APPROVAL OF THE STRUCTURAL ENGINEER OF RECORD AND DSA'S DISTRICT STRUCTURAL ENGINEER PRIOR TO INSTALLATION AND INSPECTION BY THE PROJECT INSPECTOR.

4. ALL BRACING OF PIPES SHALL BE INSTALLED IN ACCORDANCE WITH SMACNA GUIDELINES SEISMIC HAZARD LEVEL-A AS APPROVED BY DSA.

5. CONNECTION DETAILS WHICH ARE NOT SHOWN ON THE DRAWINGS OR IN THE GUIDELINES, THE FIELD INSTALLATION SHALL BE SUBJECT TO THE APPROVAL OF THE ARCHITECT, THE STRUCTURAL ENGINEER, AND THE DSA FIELD ENGINEER.

6. A COPY OF THE GUIDELINES PUBLISHED BY SMACNA AND APPROVED BY DSA SHALL BE PROVIDED BY THE CONTRACTOR AND KEPT ON THE JOB AT ALL TIMES.

7. ALL ELECTRICAL PREFABRICATED EQUIPMENT SHALL BE DESIGNED AND CONSTRUCTED IN SUCH A MANNER THAT ALL PORTIONS, ELEMENTS, SUB-ASSEMBLIES AND/OR PARTS OF SAID EQUIPMENT, AND THE EQUIPMENT AS A WHOLE INCLUDING ITS ATTACHMENTS, WILL RESIST A LOAD WHICH EXCEEDS THE FORCE LEVEL USED TO RESTRAIN AND ANCHOR THE EQUIPMENT TO THE SUPPORTING STRUCTURE.

8. ALL ELECTRICAL MATERIALS AND EQUIPMENT SHALL BE NEW AND SHALL BE LISTED BY UNDERWRITER'S LABORATORIES (UL) AND BEAR THEIR LABEL, OR LISTED AND CERTIFIED BY A NATIONALLY RECOGNIZED TESTING AUTHORITY WHERE UL DOES NOT HAVE A LISTING. CUSTOM MADE EQUIPMENT SHALL HAVE COMPLETE TEST DATA SUBMITTED BY THE MANUFACTURER ATTESTING TO ITS SAFETY. IN ADDITION, THE MATERIALS, EQUIPMENT, AND INSTALLATION SHALL COMPLY WITH THE REQUIREMENTS OF THE FOLLOWING:

AMERICAN SOCIETY OF TESTING MATERIALS (ASTM)
INSULATED POWER CABLE ENGINEERS ASSOCIATION (IPCEA)
NATIONAL ELECTRICAL MANUFACTURERS ASSOCIATION (NEMA)
AMERICAN STANDARD ASSOCIATION (ASA)
NATIONAL FIRE PROTECTION ASSOCIATION (NFPA)
AMERICAN NATIONAL STANDARD INSTITUTE (ANSI)
CALIFORNIA ELECTRICAL CODE (CEC) – 2007 EDITION
CALIFORNIA CODE OF REGULATIONS TITLE 24 (CCR)
INSTITUTE OF ELECTRICAL AND ELECTRONIC ENGINEERS (IEEE)
ALL LOCAL CODES HAVING JURISDICTION.

WHERE THE CODES HAVE DIFFERENT LEVELS OF REQUIREMENTS, THE MOST STRINGENT RULE SHALL APPLY.

9. THE CONTRACTOR SHALL VISIT THE SITE INCLUDING ALL AREAS INDICATED ON THE DRAWINGS. HE SHALL THOROUGHLY FAMILIARIZE HIMSELF WITH THE EXISTING CONDITIONS AND BY SUBMITTING A BID, ACCEPTS THE CONDITIONS UNDER WHICH HE SHALL BE REQUIRED TO PERFORM HIS WORK.

10. IT SHALL BE THE CONTRACTOR'S RESPONSIBILITY TO OBTAIN A COMPLETE SET OF CONTRACT DOCUMENTS, ADDENDA, DRAWINGS AND SPECIFICATIONS. HE SHALL CHECK THE DRAWINGS OF THE OTHER TRADES AND SHALL CAREFULLY READ THE ENTIRE SPECIFICATIONS AND DETERMINE HIS RESPONSIBILITIES. FAILURE TO DO SO SHALL NOT RELEASE THE CONTRACTOR FROM DOING THE WORK IN COMPLETE ACCORDANCE WITH THE DRAWINGS AND SPECIFICATIONS.

11. ALL UTILITY WORK (POWER, TELEPHONE, CABLE TELEVISION) SHALL BE IN COMPLIANCE WITH THESE DRAWINGS AND THE REQUIREMENTS OF THE SERVING UTILITY COMPANY. IT SHALL BE THE CONTRACTOR'S RESPONSIBILITY TO CONTACT THE SERVING UTILITY TO RECEIVE COMPLETE INFORMATION ON THEIR REQUIREMENTS PRIOR TO THE SUBMISSION OF THE BID. THE ACT OF SUBMITTING THE BID SHALL CONSTITUTE ACCEPTANCE OF FULL RESPONSIBILITY BY THE CONTRACTOR TO INSTALL SERVICE IN COMPLIANCE WITH THE SERVING UTILITY AND THE CONTRACT DOCUMENTS.

12. ALL ITEMS SUCH AS SERVICE CONDUIT, CONDUCTORS, DUCTS, CONCRETE PADS, TRANSFORMERS, RISERS, MANHOLES, PULL BOXES, AND PROTECTIVE COVERING FROM SERVICE LOCATION SHALL BE PROVIDED AND INSTALLED, AND SHALL BE VERIFIED WITH THE SERVING UTILITY COMPANY. THE CONTRACTOR SHALL INSTALL THE SERVICE IN COMPLIANCE WITH THE SERVING UTILITY COMPANY, AND SHALL PAY ALL CHARGES LEVIED BY THE SERVING UTILITY COMPANY FOR HIS SERVICE EXCEPT THE FIRST BILLING DEPOSIT. WHERE THE CONTRACT DOCUMENTS ARE MORE RESTRICTIVE, THE DOCUMENTS SHALL GOVERN.

13. THE CONTRACTOR SHALL SECURE AND PAY FOR ALL PERMITS, FEES, CHARGES, AND INCIDENTAL COSTS NECESSARY FOR EXECUTION AND COMPLETION OF ELECTRICAL WORK, INCLUDING ALL CHARGES BY STATE, COUNTY AND LOCAL GOVERNMENTAL AGENCIES.

14. THE CONTRACTOR SHALL COORDINATE HIS WORK WITH OTHER TRADES AT THE SITE. ANY COSTS TO INSTALL WORK TO ACCOMPLISH SAID COORDINATION WHICH DIFFERS FROM THE WORK AS SHOWN ON THE DRAWINGS SHALL BE INCURRED BY THE CONTRACTOR. ANY DISCREPANCIES, AMBIGUITIES OR CONFLICTS SHALL BE BROUGHT TO THE ATTENTION OF THE [ARCHITECT DURING BID TIME FOR CLARIFICATION. ANY SUCH CONFLICTS NOT CLARIFIED PRIOR TO BID SHALL BE SUBJECT TO THE INTERPRETATION OF THE ARCHITECT AT NO ADDITIONAL COST TO THE OWNER.

15. THE CONTRACTOR SHALL PROVIDE AND KEEP UP-TO-DATE A COMPLETE RECORD SET OF DRAWINGS. THESE PRINTS SHALL BE CORRECTED DAILY AND SHOW EVERY CHANGE FROM THE ORIGINAL DRAWINGS. THIS SET OF DRAWINGS SHALL BE KEPT ON THE JOB SITE AND SHALL BE USED ONLY AS A RECORD SET. THIS SHALL NOT BE CONSTRUED AS AUTHORIZATION FOR THE CONTRACTOR TO MAKE CHANGES IN THE LAYOUT WITHOUT DEFINITE INSTRUCTION IN EACH CASE. UPON COMPLETION OF THE WORK, A SET OF REPRODUCIBLE CONTRACT DRAWINGS SHALL BE OBTAINED FROM THE ARCHITECT, AND ALL CHANGES AS NOTED ON THE RECORD SET OF DRAWINGS SHALL BE INCORPORATED THEREON WITH BLACK INK IN A NEAT, LEGIBLE, UNDERSTANDABLE AND PROFESSIONAL MANNER. FAILURE TO KEEP RECORD DRAWINGS UP-TO-DATE SHALL CONSTITUTE CAUSE FOR WITHHOLDING OF PROGRESS PAYMENTS.

16. IN SOME INSTANCES, IT MAY BE NECESSARY TO DEFER WORK IN CERTAIN AREAS AND LOCATIONS UNTIL SUCH TIME AS EXISTING FACILITIES CAN BE TEMPORARILY OR PERMANENTLY REARRANGED BY THE OWNER BUILDING AUTHORITY. THEREFORE, WHENEVER IT BECOMES NECESSARY FOR THE CONTRACTOR TO PERFORM WORK UNDER THIS CONTRACT IN EXISTING AREAS IN WHICH THE OWNER'S WORK IS BEING PERFORMED, THE CONTRACTOR SHALL ADVISE THE ARCHITECT AND THE OWNER RELATIVE TO THIS REQUIREMENT AND SHALL FOLLOW CLOSELY THE DIRECTIVE ISSUED BY THE ARCHITECT INSOFAR AS TIME AND PROCEDURE ARE CONCERNED. THE CONTRACTOR SHALL INCLUDE IN HIS BID ALL PREMIUM TIME TO WHICH HE MAY BE SUBJECTED FOR PERFORMING WORK IN SUCH PROCEDURE AND AT SUCH TIMES AS MAY BE NECESSARY TO CAUSE THE LEAST INTERFERENCE WITH THE OPERATIONS OF THE OWNER.

17. ALL INTERRUPTION OF ELECTRICAL POWER SHALL BE KEPT TO A MINIMUM. HOWEVER, WHEN AN INTERRUPTION IS NECESSARY, THE SHUTDOWN MUST BE COORDINATED WITH THE OWNER AND ENGINEER 14 DAYS PRIOR TO THE OUTAGE. ANY OVERTIME PAY SHALL BE INCLUDED IN THE CONTRACTOR'S BID.

18. IT SHALL BE THE CONTRACTOR'S RESPONSIBILITY TO PROVIDE TEMPORARY POWER FACILITIES AND CONNECTIONS FOR ALL FEEDERS OR SYSTEMS BEING DISCONNECTED IN ORDER TO MAINTAIN SYSTEMS IN OPERATION OR WHERE SAID FEEDERS OR SYSTEMS REQUIRE EMERGENCY STANDBY POWER.

19. SHOP DRAWINGS SHALL BE SUBMITTED WITHIN THIRTY DAYS AFTER AWARD OF THE CONTRACT. THE CONTRACTOR SHALL SUBMIT EIGHT COPIES OF A COMPLETE LIST OF MATERIALS AND EQUIPMENT INCLUDING MANUFACTURER AND MODEL NUMBER PROPOSED FOR THE JOB. SHOP DRAWINGS SHALL INCLUDE JOB DESCRIPTION, ARCHITECT AND ENGINEER IDENTIFICATION, AND ALL DATA WITH CAPACITIES, SIZES, DIMENSIONS, CATALOG NUMBERS, AND MANUFACTURER'S BROCHURES. SHOP DRAWINGS SHALL BE SUBMITTED FOR ITEMS LISTED IN SPECIFICATIONS. PARTIAL, INCOMPLETE, OR UNBOUND SUBMITTALS WILL BE RETURNED WITHOUT REVIEW.

20. AFTER ALL REQUIREMENTS OF THE SPECIFICATIONS AND/OR THE DRAWINGS HAVE BEEN FULLY COMPLETED, REPRESENTATIVES OF THE OWNER WILL INSPECT THE WORK. THE CONTRACTOR SHALL PROVIDE COMPETENT PERSONNEL TO DEMONSTRATE THE OPERATION OF ANY ITEM OR SYSTEM [TO THE FULL SATISFACTION OF EACH REPRESENTATIVE. FINAL ACCEPTANCE OF THE WORK WILL BE MADE BY THE OWNER AFTER RECEIPT OF APPROVAL AND RECOMMENDATION OF ACCEPTANCE FROM EACH REPRESENTATIVE].

21. THE CONTRACTOR SHALL FURNISH A ONE YEAR WRITTEN GUARANTEE OF MATERIALS AND WORKMANSHIP FROM THE DATE OF SUBSTANTIAL COMPLETION.

22. IT SHALL BE THE RESPONSIBILITY OF THE CONTRACTOR TO REVIEW AND TO COORDINATE WITH THE MECHANICAL, FIRE PROTECTION AND PLUMBING DRAWINGS FOR DUCTS, LINES AND EQUIPMENT.

23. ALL EQUIPMENT MOUNTED ON ROOF FOR CONNECTION OF HVAC EQUIPMENT SHALL BE MOUNTED ON UNISTRUT STANDS UTILIZING APPROVED PITCH POCKETS, FLASHING, ETC.

24. ALL FINAL CONNECTIONS TO OWNER FURNISHED EQUIPMENT SHALL BE MADE BY THE CONTRACTOR.

25. COORDINATE WITH OTHER TRADES AS TO THE EXACT LOCATION OF THEIR RESPECTIVE EQUIPMENT. SUPPLY POWER AND MAKE CONNECTION TO MOTORS AND EQUIPMENT REQUIRING ELECTRICAL CONNECTIONS AS INDICATED ON THE SINGLE LINE DIAGRAM, ELECTRICAL DRAWINGS, AND DRAWINGS OF OTHER TRADES. REVIEW THE DRAWINGS OF OTHER TRADES FOR CONTROL DIAGRAMS, SIZE AND LOCATION OF EQUIPMENT. DISCONNECT SWITCHES, STARTERS, WIRING, CONTROLS, AND CONDUIT FOR MECHANICAL AND PLUMBING OPERATIONS SHALL BE PROVIDED. THE CONTRACTOR SHALL BE RESPONSIBLE FOR OBTAINING MANUFACTURER'S SHOP DRAWINGS PRIOR TO ROUGHING IN ALL CONDUIT TO THIS EQUIPMENT.

26. EXACT METHOD AND LOCATION OF CONDUIT PENETRATION AND OPENINGS IN CONCRETE WALLS OR FLOORS OR STRUCTURAL STEEL MEMBERS SHALL BE AS DIRECTED BY THE ARCHITECT AND REVIEWED AND APPROVED BY DSA. PERFORM CORING, SAW CUTTING, PATCHING, AND REFINISHING OF EXISTING WALLS AND SURFACES WHEREVER IT IS NECESSARY TO PENETRATE. NO STRUCTURAL MEMBER, FLOOR OR WALL SHALL BE CUT, NOTCHED OR BORED UNLESS SPECIFICALLY DETAILED ON THE APPROVED PLANS OR REVIEWED AND APPROVED BY THE ARCHITECT OF RECORD AND DSA PRIOR TO BEGINNING SUCH WORK. OPENINGS SHALL BE SEALED IN AN APPROVED METHOD TO MEET THE FIRE RATING OF THE PARTICULAR WALL, FLOOR OR CEILING. EXACT METHOD AND LOCATIONS OF CONDUIT PENETRATIONS AND OPENINGS IN CONCRETE WALLS OR FLOORS SHALL BE UL APPROVED.

27. ROUTE EXPOSED CONDUIT AND CONDUIT ABOVE ACCESSIBLE CEILING SPACES PARALLEL AND PERPENDICULAR TO WALLS AND ADJACENT PIPING. ARRANGE CONDUIT TO MAINTAIN HEADROOM AND TO PRESENT A NEAT APPEARANCE.

28. CONDUIT SHALL NOT BE INSTALLED IN ANY FLOOR SLAB. CONDUIT SHALL BE INSTALLED CONCEALED IN THE CEILING SPACE, CONCEALED IN WALLS, OR BELOW SLAB ON GRADE UNLESS NOTED OTHERWISE.

29. ATTENTION IS CALLED TO THE FACT THAT THE CEILING SYSTEMS FOR THE MOST PART ARE CONSIDERED TO BE INACCESSIBLE. THE CONTRACTOR SHALL STRATEGICALLY LOCATE BOXES, ETC., IN AN ACCESSIBLE CEILING SPACE.

30. THE CONTRACTOR SHALL BE RESPONSIBLE FOR ALL SAWCUTTING, TRENCHING, BACKFILLING, COMPACTION AND PATCHING OF CONCRETE AND ASPHALT AS REQUIRED TO PERFORM HIS WORK. ATTENTION IS CALLED TO THE FACT THAT THERE ARE EXISTING UNDERGROUND UTILITY LINES. THE CONTRACTOR SHALL USE EXTREME CAUTION WHEN TRENCHING FOR HIS WORK. THE CONTRACTOR SHALL BE RESPONSIBLE FOR THE PROPER AND APPROVED REPAIR OF ANY AND ALL DAMAGES CAUSED BY HIM OR HIS WORK.

31. WHENEVER A DISCREPANCY IN QUANTITY OR SIZE OF CONDUIT, WIRE, EQUIPMENT DEVICES, CIRCUIT BREAKERS, GROUND FAULT PROTECTION SYSTEMS, ETC. (ALL MATERIALS), ARISES ON THE DRAWINGS OR SPECIFICATIONS, THE CONTRACTOR SHALL BE RESPONSIBLE FOR PROVIDING AND INSTALLING ALL MATERIAL AND SERVICES REQUIRED BY THE STRICTEST CONDITIONS NOTED ON THE DRAWINGS OR IN THE SPECIFICATIONS TO ENSURE COMPLETE AND OPERABLE SYSTEMS AS REQUIRED BY THE OWNER AND ARCHITECT/ENGINEER.

32. IT SHALL BE THE CONTRACTOR'S RESPONSIBILITY TO VERIFY TYPE OF CEILING SYSTEMS AND TO FURNISH APPROVED LIGHTING FIXTURES OF THE TYPE REQUIRED FOR MOUNTING IN SUBJECT CEILING. WHERE FIXTURES ARE RECESSED IN PLASTER OR DRYWALL CEILINGS, THEY SHALL BE COMPLETE WITH NECESSARY MOUNTING HARDWARE AND PLASTER FRAMES.

33. UTILITY PENETRATIONS OF ANY KIND IN FIRE AND SMOKE PARTITIONS AND CEILING ASSEMBLIES, SHALL BE FIRESTOPPED AND SEALED WITH AN APPROVED MATERIAL SECURELY INSTALLED.

STEEL ELECTRICAL OUTLET BOXES WHICH DO NOT EXCEED 16 SQUARE INCHES IN AREA, NEED NOT BE PROTECTED IN ONE HOUR OR TWO HOUR FIRE RATED WALLS, PARTITIONS, CEILINGS, OR AREA SEPARATION UNLESS THEY:

OCCUR ON OPPOSITE SIDES OF THE WALL WITHIN 24 INCH HORIZONTAL DISTANCE OF ONE ANOTHER. IN THIS CASE, ONLY ONE OUTLET BOX NEED TO PROTECTED BY AN APPROVED FIRESTOP MATERIAL OR DETAIL TO CORRECT THIS CONDITION.

OCCUR IN COMBINATION WITH OUTLET BOXES OF ANY SIZE SUCH THAT THE AGGREGATE AREA OF UNPROTECTED OUTLET BOXES EXCEEDS 100 SQUARE INCHES IN ANY 100 SQUARE FEET OF WALL AREA. IN THIS CASE, ONLY A SUFFICIENT NUMBER OF OUTLET BOXES NEED BE PROTECTED BY AN APPROVED MATERIAL OR DETAIL TO DECREASE THE AGGREGATE AREA OF UNPROTECTED UTILITY BOXES TO LESS THAN 100 SQUARE INCHES IN ANY 100 SQUARE FEET OF WALL.

STEEL ELECTRICAL OUTLET BOXES WHICH EXCEED 16 SQUARE INCHES IN AREA, AND ALL OTHER STEEL UTILITY OUTLET BOXES REGARDLESS OF SIZE, SHALL BE PROTECTED BY AN APPROVED FIRESTOP MATERIAL AS LISTED OR EQUAL.

FIRESTOPPING MATERIAL: MPP-1 MOLDABLE PUTTY PADS 3M
CONTRACTOR PRODUCTS
MINNEAPOLIS, MN 3M TEST

REPORT NO. 1167
DATED AUGUST 21, 1987
FSP FIRESTOP PUTTY PADS
HEVI-DUTY
NELSON PRODUCTS
TULSA, OK
FLAMESAFE FSP 1077
FIRESTOP PADS
INTERNATIONAL PROTECTIVE
COATINGS OAKHURST, NJ

STEEL UTILITY BOXES WHICH
EXCEED 100 SQUARE INCHES
IN AREA SHALL BE
PROTECTED BY ENCASEMENT.

UTILITY AND ELECTRICAL OUTLETS OR BOXES SHALL BE SECURELY FASTENED TO THE STUD OF FRAMING OF THE WALL, PARTITION OR CEILING ASSEMBLY. THE OPENING IN THE GYPSUM BOARD FACING SHALL BE CUT SO THAT THE CLEARANCE BETWEEN THE BOX AND THE GYPSUM BOARD DOES NOT EXCEED 1/8 INCH. IN SMOKE WALLS OR PARTITIONS, THE 1/8 INCH CLEARANCE SHALL BE FILLED WITH AN APPROVED FIRE-RATED SEALANT.

34. ARCHITECTURAL REFLECTED CEILING PLANS INDICATING THE LOCATION OF LIGHTING FIXTURES SHALL TAKE PRECEDENCE OVER THE LOCATIONS OF SAME SHOWN ON THE ELECTRICAL DRAWINGS. INSTALL THE LIGHTING FIXTURES IN ANY GIVEN AREA TO AGREE WITH THE REFLECTED CEILING PLANS. DISCREPANCIES SHALL BE BROUGHT TO THE ATTENTION OF THE ARCHITECT.

35. REFER TO SINGLE LINE DIAGRAM AND FEEDER SCHEDULES FOR CONDUIT AND CONDUCTOR SIZE TO PANELS, TRANSFORMERS, MECHANICAL AND PLUMBING EQUIPMENT, ETC. CONDUIT RUNS MAY NOT BE SHOWN ON DRAWINGS, BUT ARE PART OF THIS CONTRACT.

36. STRAIGHT FEEDER, BRANCH CIRCUIT, AND CONDUIT RUNS SHALL BE PROVIDED WITH SUFFICIENT PULL BOXES OR JUNCTION BOXES TO LIMIT THE MAXIMUM LENGTH OF ANY SINGLE CABLE PULL TO 100 FEET. PULL BOXES SHALL BE SIZED PER CODE OR AS INDICATED ON DRAWINGS. LOCATIONS SHALL BE DETERMINED IN THE FIELD OR AS INDICATED ON THE DRAWINGS.

37. THE NUMERALS SHOWN AT TOP OF LIGHT FIXTURE IDENTIFICATION SYMBOLS INDICATING THE NUMBER OF LIGHT FIXTURES REQUIRED SHALL NOT BE USED BY THE CONTRACTOR FOR HIS QUANTITY TAKE-OFF AT BIDDING, NOR FOR DETERMINATION OF HOW MANY FIXTURES WILL BE INSTALLED. THE CONTRACTOR SHALL INSTALL A LIGHT FIXTURE WHEREVER A FIXTURE OUTLET IS SHOWN ON THE DRAWINGS.

38. THE EXACT LOCATION OF ALL ELECTRICAL DEVICES AND EQUIPMENT SHALL BE COORDINATED WITH THE ARCHITECTURAL ELEVATIONS, DETAILS, OR SECTIONS PRIOR TO INSTALLATION. ALL ELECTRICAL DEVICES AND EQUIPMENT SHALL BE RECESSED IN WALLS UNLESS OTHERWISE NOTED. OUTLETS NOT INDICATED ON ARCHITECTURAL ELEVATIONS SHALL BE COORDINATED WITH THE ARCHITECT PRIOR TO ROUGH-IN. UNLESS OTHERWISE NOTED, MOUNT ELECTRICAL DEVICES AT THE FOLLOWING HEIGHTS:

WALL SWITCH	+4'-0"	SET VERTICALLY TO TOP OF DEVICE
CONVENIENCE RECEPTACLE	+1'-3"	SET VERTICALLY TO BOTTOM OF DEVICE
TELEPHONE/DATA OUTLETS	+1'-3"	SET VERTICALLY TO BOTTOM OF DEVICE
OUTLETS AT COUNTERS	+6"	ABOVE COUNTERS

REVIEW ARCHITECTURAL ELEVATIONS OF CASEWORK. OUTLETS MOUNTED ABOVE OR BELOW, OR ADJACENT TO CASEWORK SHALL BE COORDINATED WITH THE ARCHITECTURAL DRAWINGS, PRIOR TO FINAL ROUGH-IN. ELECTRICAL DRAWINGS SHALL GOVERN NUMBER AND TYPE OF OUTLETS. HOWEVER, LOCATIONS SHALL BE AS INDICATED ON ARCHITECTURAL ELEVATIONS. PROVIDE CONDUIT, WIRES, AND OUTLETS FOR WORK REQUIRED IN CASEWORK INSTALLATIONS. REFERENCE ARCHITECTURAL DETAILS FOR METHOD OF ROUTING CONDUIT WITHIN CASEWORK CONSTRUCTION. THE CONTRACTOR SHALL BE RESPONSIBLE FOR CUT-OUTS IN TILE OR COUNTER SPLASHES WHERE RECEPTACLES, OUTLETS, ETC. OCCUR. PROVIDE BOX EXTENSIONS THROUGH ALL CASEWORK. FINISH FLUSH WITH FACE OF SPLASH, CABINET, ETC.

MOUNTING HEIGHTS OF ALL DEVICES AND EQUIPMENT ARE FROM FINISHED FLOOR TO CENTER OF DEVICES AND EQUIPMENT UNLESS OTHERWISE NOTED. BOXES INSTALLED IN LOCATIONS NOT APPROVED BY THE ARCHITECT SHALL BE RELOCATED AS DIRECTED BY THE ARCHITECT AT NO ADDITIONAL COST TO THE OWNER.

39. DRAWINGS ARE DIAGRAMMATIC ONLY. ROUTING OF RACEWAYS SHALL BE AT THE OPTION OF THE CONTRACTOR UNLESS OTHERWISE NOTED AND SHALL BE COORDINATED WITH OTHER SECTIONS. DO NOT SCALE THE ELECTRICAL DRAWINGS FOR LOCATIONS OF ANY ELECTRICAL, ARCHITECTURAL, STRUCTURAL, CIVIL, OR MECHANICAL ITEMS OR FEATURES.

40. CONTRACTOR SHALL CROSS REFERENCE SINGLE-LINE AND RISER DIAGRAMS WITH SITE AND FLOOR PLANS FOR ALL SYSTEMS.

41. ALL UN-USED WALL RECESSED MOUNTED JUNCTION BOX FOR THE REMOVED FIRE ALARM, PAGING AND POWER DEVICES SHALL BE PROVIDED WITH BLANK PLATE COVERS.

42. EXTRA DEVICES

DUE TO UNFORESEEN CONDITION, THE FOLLOWING EXTRA DEVICES SHALL BE INCLUDED IN THE CONTRACTORS BID:

a. SMOKE DETECTORS 7 EACH/BUILDING
b. HEAT DETECTORS 7 EACH/BUILDING
c. STROBE/HORN (EXTERIOR/INTERIOR) 2 EACH/BUILDING

FOR BID PURPOSES, ALLOW TWENTY (20) FEET OF CONDUIT AND ITS SUPPORT SYSTEM TO INCLUDE FITTINGS, WIRES AND LABOR FOR EACH OF THE DEVICES LISTED ABOVE.

43. CONTRACTOR SHALL RE-SECURE ALL REUSE EXISTING CONDUITS AND BOXES PER CODE.

44. ALL NEW LIGHT FIXTURES RECONNECTED TO THE PORTIONS OF EXISTING CIRCUIT TO REMAIN SHALL BE PROVIDED WITH NEW WHIP.

1B

1A

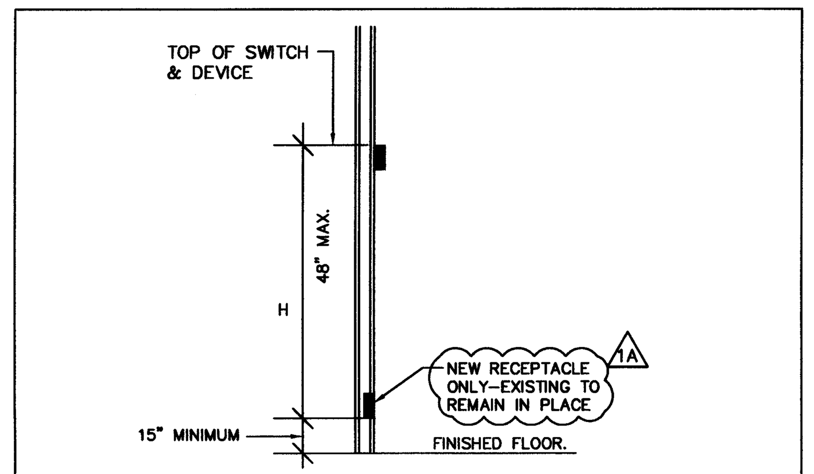

DEVICE MOUNTING HEIGHT DETAIL

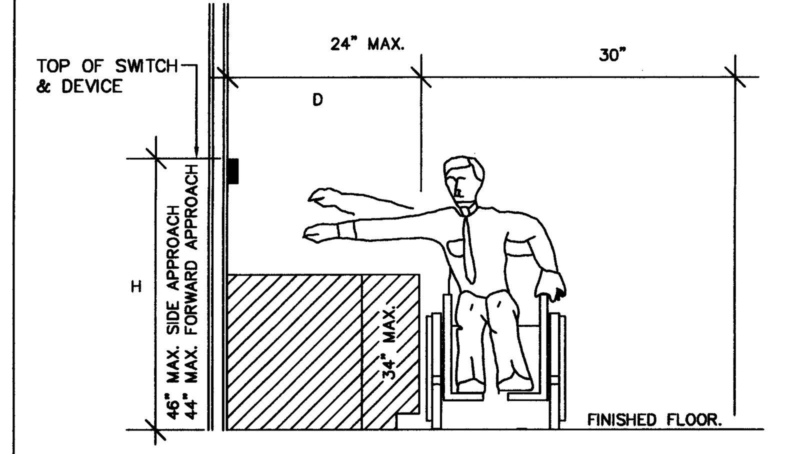

OVER OBSTRUCTION DETAIL

DEMOLITION NOTES

1. IN GENERAL, THE DEMOLITION PLAN SHOWS ALL EXISTING EQUIPMENT TO BE REMOVED; HOWEVER, ELECTRICAL EQUIPMENT, WHETHER SHOWN ON THIS DRAWING OR NOT THAT IS LOCATED IN REMOVED WALLS, FLOORS OR CEILINGS, SHALL BE REMOVED UNLESS OTHERWISE NOTED.
2. IT SHALL BE THE ELECTRICAL CONTRACTOR'S RESPONSIBILITY TO DISCONNECT AND REMOVE ALL EXISTING LIGHTING FIXTURES, RECEPTACLES, FIRE ALARM, PAGING, INTERCOM VOICE AND DATA DEVICES, ETC., AFFECTED BY THE REMODELED AREA. THIS WILL INCLUDE REROUTING, OR THE EXTENSION OF, EXISTING CONDUIT AND FEEDERS AND CABLING WHERE NECESSARY TO MAINTAIN THE CONTINUITY OF EXISTING EQUIPMENT REMAINING.
3. ALL CIRCUIT NUMBERS AND EXISTING CONDUIT HOMERUNS SHOWN ON THESE DRAWINGS WERE TAKEN FROM EXISTING RECORD DRAWINGS. IT IS THIS CONTRACTOR'S RESPONSIBILITY TO VERIFY LOCATIONS OF HOMERUNS, AND ADJUST CIRCUIT NUMBERS ACCORDING TO EXISTING CONDITIONS IF REQUIRED.
4. EXISTING CONDUIT FEEDS UP THROUGH FLOOR SHALL BE CUT OFF AND PLUGGED FLUSH WITH FLOOR WHERE EXISTING WALLS, ETC., ARE REMOVED. REMOVE CONDUCTORS FROM THIS POINT BACK TO LAST OUTLET REMAINING IN SERVICE.
5. WHERE EXISTING WALLS HAVE BEEN REMOVED, AND THERE ARE EXISTING CONDUIT FEEDS WHICH HAVE BEEN CUT-OFF AND CAPPED FLUSH WITH FLOOR, IT IS THE CONTRACTOR'S RESPONSIBILITY TO IDENTIFY AND DIMENSION ALL SUCH CONDUITS ON THE "AS-BUILT" DRAWINGS UNLESS OTHERWISE NOTED.
6. IT SHALL BE THE RESPONSIBILITY OF THIS CONTRACTOR TO MAINTAIN CONTINUITY OF ALL ELECTRICAL AND LOW VOLTAGE SYSTEMS, EQUIPMENT, ETC., REMAINING IN OPERATION WHICH ARE BEING FED BY AN ABANDONED OUTLET TERMINAL CABINET, LOW VOLTAGE EQUIPMENT OR PANELBOARD. MAINTAINING CONTINUITY SHALL CONSIST OF REROUTING CONDUIT, WIRING, ETC., AS REQUIRED.
7. ALL ELECTRICAL FIXTURES, OUTLETS, DEVICES, ETC., THAT ARE REMOVED, SHALL BE REMOVED COMPLETELY, INCLUDING CONDUIT AND WIRING BACK TO THE LAST FIXTURE, OUTLET, DEVICE, ETC., REMAINING IN SERVICE.
8. EXISTING CIRCUITS WHICH ARE REMOVED AND NOT REUSED SHALL BE IDENTIFIED ON THE PANEL SCHEDULE AS "SPARE".
9. THE ELECTRICAL CONTRACTOR SHALL COORDINATE WITH THE OWNER PRIOR TO REMOVAL OF EXISTING ELECTRICAL EQUIPMENT, AND TURN OVER REMOVED EQUIPMENT THAT THE OWNER REQUESTS IN AN "AS-FOUND" CONDITION. EQUIPMENT THAT IS TO BE TURNED OVER SHALL BE BOXED AND TAGGED TO IDENTIFY THE SPECIFIC EQUIPMENT.
10. WHERE NEW CIRCUITS ARE SHOWN TO EXISTING PANELS, INSTALL NEW BREAKERS (MINIMUM 20 AMP, SINGLE POLE) AS CALLED FOR ON DRAWINGS. IDENTIFY EACH NEW CIRCUIT ON PANEL SCHEDULE.
11. EXISTING CONDUIT MAY BE REUSED IF ADEQUATELY SIZED, BUT IN NO CASE SHALL ANY EXISTING CONDUCTORS BE REUSED.
12. IN SOME INSTANCES, IT MAY BE NECESSARY FOR THE ELECTRICAL CONTRACTOR TO TEMPORARILY RELOCATE, REROUTE, ETC., EXISTING ELECTRICAL EQUIPMENT. THIS SHALL BE DONE SO THAT THE SYSTEMS IN ALL PHASES (THOSE COMPLETED AND THOSE YET TO BEGIN), ARE IN COMPLETE, OPERABLE, CONDITION AS CONSTRUCTION PROCEEDS THROUGH EACH PHASE.
13. WHERE NEW CIRCUITS ARE SHOWN CROSSING PHASING BOUNDARIES (I.E., CORRIDOR LIGHTING, ETC.) THIS CONTRACTOR SHALL CONNECT ALL EQUIPMENT, FIXTURES, ETC., IN THE PHASE WHICH IS THEN UNDER CONSTRUCTION. CONTRACTOR SHALL STUB OUT ALL REQUIRED CONDUIT AND WIRING ACROSS PHASE BOUNDARIES; THEN, PICK UP AND EXTEND THESE CONDUIT RUNS WHEN CONSTRUCTION BEGINS IN THE ADJACENT PHASE.
14. DURING EACH PHASE OF DEMOLITION, ALL CIRCUITS FROM EXISTING PANELS WHICH FEED AREAS OUTSIDE THE BOUNDARIES OF THAT PHASE, SHALL BE MAINTAINED.
15. PANELS, TERMINAL CABINETS, OR LOW VOLTAGE EQUIPMENT, WHICH ARE LOCATED IN A WALL THAT IS TO BE DEMOLISHED, SHALL REMAIN IN AN OPERATIVE CONDITION UNTIL ALL AREAS FED BY THE RELATED PANELS, TERMINAL CABINETS, OR LOW VOLTAGE EQUIPMENT, HAVE BEEN DEMOLISHED. THIS CONTRACTOR SHALL PROVIDE AND INSTALL ALL EQUIPMENT REQUIRED TO TEMPORARILY SUPPORT PANELS. PANELS MAY BE TEMPORARILY FREESTANDING, MOUNTED IN TEMPORARY PORTION OF WALLS TO BE DEMOLISHED LATER, ETC. CHECK WITH ARCHITECT AND ENGINEER FOR APPROVAL OF SUPPORTS. IT SHALL ALSO BE THIS CONTRACTOR'S RESPONSIBILITY TO RELOCATE AND RECONNECT ALL CIRCUITS ON A TEMPORARY BASIS IF THE PANELS, TERMINAL CABINETS, OR LOW VOLTAGE EQUIPMENT, ETC., CONFLICT WITH THE NEW CONSTRUCTION PHASES, AND THEN SHALL BE REMOVED AFTER COMPLETION OF PHASES.
16. ALL ABANDONED OUTLETS INCLUDING LIGHTS, RECEPTACLES, TELEPHONES, ETC., SHALL BE COVERED AND PATCHED TO MATCH THE FINISH OF SURROUNDING WALL OR CEILING TO THE SATISFACTION OF THE OWNER.
17. ALL LIGHTING FIXTURES REMOVED TO ACCOMPLISH DEMOLITION WORK SHALL BE REINSTALLED SIMILAR TO NEW WORK, WHERE INDICATED ON DRAWINGS.

1A

BY E-RATE CONTRACTOR & OWNER:

E-RATE RELATED LOW VOLTAGE ITEMS

a. ~~PROVISION OF SEVEN (7) DATA OUTLETS AND RELATED CABLING IN ALL CLASSROOMS.~~

b. ~~PROVISION OF ADDITIONAL PATCH PANELS, COPPER AND F.O. SWITCHES IN EXISTING MDF EQUIPMENT RACK TO ACCOMODATE ADDITIONAL DATA OUTLETS.~~

DRAWING LIST

DWG.NO.	DESCRIPTION
E0.1	GENERAL NOTES, DRAWING LIST, APPLICABLE CODE AND STANDARDS
E0.2	LEGEND & ABBREVIATIONS
E0.3	SINGLE LINE DIAGRAM
E0.4	~~SINGLE LINE DIAGRAM~~ 1A
~~E0.5~~	~~AUDIO/VIDEO POLE VAULT SYSTEMS BLOCK DIAGRAM~~
E0.7	LIGHTING FIXTURE SCHEDULE
E0.8	BUILDING 6 TITLE 24 CALCULATION
E0.9	BUILDING 7 TITLE 24 CALCULATION
E1.1	POWER SITE PLAN
~~E1.2~~	~~SIGNAL SITE PLAN~~ 1A
E1.3	FIRE ALARM SITE PLAN
E1.4	PORTABLE BUILDNG FIRE ALARM REMOVEL PLANS
E1.5	PORTABLE BUILDNG FIRE ALARM PLANS
ED2.1	BUILDINGS 1 & 5 – DEMOLITION PLANS
ED2.2	BUILDING 2 – DEMOLITION PLAN
ED2.3	BUILDINGS 3 & 4 – DEMOLITION PLANS
ED2.4	BUILDING 6 – DEMOLITION PLANS
ED2.5	BUILDING 7 – DEMOLITION PLANS
E2.1	BUILDINGS 6 & 7 LIGHTING PLAN
E3.1	BUILDINGS 1 & 5 POWER PLAN
E3.2	BUILDING 2 PARTIAL POWER PLAN
E3.3	BUILDINGS 3 & 4 PARTIAL POWER PLANS
E3.4	BUILDINGS 6 & 7 POWER PLANS
~~E4.1~~	~~BUILDINGS 1 & 5 SIGNAL PLAN~~
~~E4.2~~	~~BUILDING 2 SIGNAL PLAN~~ 1A
~~E4.3~~	~~BUILDINGS 3 & 4 SIGNAL PLAN~~
~~E4.4~~	~~BUILDINGS 6 & 7 SIGNAL PLANS~~
E5.1	BUILDINGS 1 & 5 FIRE ALARM PLANS
E5.2	BUILDING 2 FIRE ALARM PLANS
E5.3	BUILDINGS 3 & 4 FIRE ALARM PLAN
E5.4	BUILDINGS 6 & 7 FIRE ALARM PLANS
E5.5	FIRE ALARM NOTES, LEGEND & WIRING DETAIL
E5.6	FIRE ALARM CALCULATIONS
E5.7	FIRE ALARM DETAILS & SEQUENCE OF OPERATIONS
E5.8	FIRE ALARM RISER DIAGRAM
E6.0	PANELBOARD SCHEDULES
E7.0	DETAILS
E7.1	DETAILS

APPLICABLE CODES AND STANDARDS

- 2007 CALIFORNIA BUILDING STANDARDS ADMINISTRATIVE CODE CALIFORNIA CODE OF REGULATIONS (CCR) TITLE 24, PART 1
- 2007 CALIFORNIA BUILDING CODE (CBC) CALIFORNIA CODE OF REGULATIONS (CCR) TITLE 24, PART 2 (2006 INTERNATIONAL BUILDING CODE (IBC) W/CALIFORNIA AMENDMENTS)
- 2007 CALIFORNIA ELECTRICAL CODE (CEC) CALIFORNIA CODE OF REGULATIONS (CCR) TITLE 24, PART 3 (2005 NATIONAL ELECTRICAL CODE (NEC) W/CALIFORNIA AMENDMENTS)
- 2007 CALIFORNIA MECHANICAL CODE CALIFORNIA CODE OF REGULATIONS (CCR) TITLE 24, PART 4 (2006 UNIFORM MECHANICAL CODE (UMC) W/CALIFORNIA AMENDMENTS
- 2007 CALIFORNIA PLUMBING CODE CALIFORNIA CODE OF REGULATIONS (CCR) TITLE 24, PART 5 (2006 UNIFORM PLUMBING CODE (UPC) W/CALIFORNIA AMENDMENTS)
- 2007 CALIFORNIA ENERGY CODE CALIFORNIA CODE OF REGULATIONS (CCR) TITLE 24, PART 6
- 2007 CALIFORNIA FIRE CODE (CFC) CALIFORNIA CODE OF REGULATIONS (CCR) TITLE 24, PART 9 (2006 INTERNATIONAL FIRE CODE (IFC) W/CALIFORNIA AMENDMENTS)
- 2007 CALIFORNIA EXISTING BUILDING CODE CALIFORNIA CODE OF REGULATIONS (CCR) TITLE 24, PART10 (2006 INTERNATIONAL EXISTING BUILDING CODE (IEBC))
- 2007 CALIFORNIA REFERENCED STANDARDS CODE CALIFORNIA CODE OF REGULATIONS (CCR) TITLE 24, PART 12
- AMERICANS WITH DISABILITIES ACT (ADA) TITLE II – ACCESSIBILITY GUIDELINES FOR BUILDINGS AND FACILITIES (ADAG)
- CALIFORNIA CODE OF REGULATIONS (CCR) TITLE 24, CALIFORNIA STATE ACCESSIBILITY STANDARDS CALIFORNIA CODE OF REGULATIONS (CCR) TITLE 19

1990 TITLE 19, C.C.R. PUBLIC SAFETY, STATE FIRE MARSHAL

NFPA 13, 2002 EDITION, THE INSTALLATION OF AUTOMATIC SPRINKLER SYSTEMS, AS AMENDED

NFPA 14, 2003 EDITION, INSTALLATION OF STANDPIPE, PRIVATE HYDRANT AND HOSE SYSTEMS

NFPA 24, 2002 EDITION, INSTALLATION OF PRIVATE FIRE SERVICE MAINS AND THEIR APPURTENANCES

NFPA 72, 2002 EDITION, NATIONAL FIRE ALARM CODE, AS AMENDED

COMPLETE FIRE SYSTEM DESIGN SUBMITTAL PER CBC 2007 907.2.3

THE FIRE ALARM DESIGN IS CONFIGURED TO FULLY AUTOMATIC SYSTEM

SANTA ANA UNIFIED SCHOOL DISTRICT

gkkworks
2355 Main Street Suite 220
Irvine | CA 92614
949 250 1500
949 955 2708 fax

Architect Seal

LICENSED ARCHITECT GUILLERMO AGUILAR NO. C13165 REN.: MAY. 2013 STATE OF CALIFORNIA

Consultant and Seal

TTG • STRUCTURAL • MECHANICAL • ELECTRICAL • CIVIL
TMAD TAYLOR & GAINES
901 Via Piemonte, Suite 400
Ontario, California 91764
Phone: 909.477.6915 Fax: 909.477.6916
www.ttgcorp.com Project No. 2008.125.00

REGISTERED PROFESSIONAL ENGINEER NESTOR C. IGNACIO, JR. Lic. E16934 Exp. 6-30-2013 ELECTRICAL STATE OF CALIFORNIA

Agency Approval

IDENTIFICATION STAMP
DIV. OF THE STATE ARCHITECT
APPL. 04-110031
AC ____ FLS ____ SS ____
DATE ____

No.	Date	Revision/Issue
	12/08/08	DSA SUBMITTAL
	02/11/09	DSA SUBMITTAL
	5/11/09	DSA BACKCHECK
1A	12/16/2011	ADDENDUM 1A
1B	01/20/2012	ADDENDUM 1

Project Name

MUIR
FUNDAMENTAL
SCHOOL MODERNIZATION
1951 MABURY ST.
SANTA ANA, CA 92707

Checked By	Drawn By
RA	JHC

Sheet Title

GENERAL NOTES, DRAWING LIST, APPLICABLE CODE AND STANDARDS

Sheet Number

E0.1

Project Number	Scale
10021-010	NONE

© 2012 gkkworks, All Rights Reserved
NO PART OF THE CONTENTS OF THIS DOCUMENT MAY BE REPRODUCED OR TRANSMITTED IN ANY FORM OR BY ANY MEANS WITHOUT THE WRITTEN PERMISSION OF GKKWORKS.