C.W. Driver
BUILDERS SINCE 1919

SAUSD – Muir Elementary School Modernization

BID PACKAGE CLARIFICATIONS
ADDENDUM 1

ITEM # 1: SPECIFICATION SECTION 01010 – SCOPE OF WORKS

Add Item: Addendum No. 1 Narrative Summary as issued by gkkworks dated 1/20/12.

ITEM # 2: SPECIFICATION SECTION 00438 – WORK PLAN AND MILESTONE SCHEDULE

Revise Item: Add milestone for material procurement to 6/1/12. Revise completion of construction work, ready for owner occupancy to 8/10/12.

ITEM # 3: SPECIFICATION SECTION 00700 – GENERAL CONDITIONS

Revise Item: The following subsections are replaced in their entirety to read as follows:

21.2 Monthly Payments by the District to the Contractor. Unless otherwise specified in writing, each month within thirty (30) days after receipt by the District of the monthly progress schedule and the certification of application for payment by the Architect, the District shall pay to the Contractor a sum equal to ninety-five percent (95%) of value of work performed and of materials delivered subject to or under the control of the District and unused up to the last day of the previous month, less aggregate previous payments. Monthly payments shall be made only on the basis of monthly estimates which shall be prepared by the Contractor on a form approved by the District and filed before the fifth (5th) day of the month during which payment is to be made. Work completed as estimated shall be an estimate only and no inaccuracy or error in said estimate shall operate to release the Contractor or its surety from any damages arising from such Work or from enforcing each and every provision of the Agreement, and the District shall have the right subsequently to correct any error made in any estimate for payment. THE CONTRACTOR SHALL NOT BE ENTITLED TO HAVE ANY PAYMENT ESTIMATES PROCESSED OR BE ENTITLED TO HAVE ANY PAYMENT FOR WORK PERFORMED SO LONG AS ANY LAWFUL OR PROPER DIRECTION CONCERNING WORK, OR ANY PORTION THEREOF, GIVEN BY THE DISTRICT, THE CONSTRUCTION MANAGER OR THE ARCHITECT SHALL REMAIN UNCOMPLIED WITH BY THE CONTRACTOR.

21.5 Partial Payments; Retention. The Architect and Construction Inspector shall review and certify as to the validity of the requests. No partial payment shall be made without the certification of the Architect. Partial payment requests shall be processed within a minimum of a five percent (5%) retention. The retention is part of the security for the fulfillment of the Agreement by the Contractor. Partial payment shall not be construed as acceptance of any work which is not in accordance with requirements of the Agreement. Once the partial payment request has been certified by the Architect and the Construction Inspector, it shall be submitted to the District's Construction Manager for approval and processing. Such procedures provided for sixty (60) days processing, from the date the receipt at the District Office by the Construction Manager, prior to late payment penalty.

21.10.1 Payments which may be past due and payable for claims against the Contractor or any Subcontractors, or against and about the performance of Work on the Project.

(a) If there is a labor compliance program ("LCP") in force on this Project, the failure to provide certified payroll records acceptable to the District and/or the LCP for each journeyman,

apprentice, worker, or other employee employed by the Contractor and/or each Subcontractor in connection with the Work for the period of the Application for Payment;

(b) Failure to properly pay prevailing wages as defined in Labor Code section 1720 et seq., failure to comply with any other Labor Code requirements, and/or failure to comply with the LCP, if one is in force on this Project;

ITEM # 4: SPECIFICATION SECTION 00800 – SUPPLEMENTAL CONDITIONS

Revise Item: The following subsections are replaced in their entirety to read as follows:

6. Labor Compliance Program. The District and/or the Department of Industrial Relations is implementing a labor compliance program ("LCP") on the Project. Contractor specifically acknowledges and understands that it shall perform the Work of this Agreement while complying with all the applicable provisions of the LCP, including, without limitation, the requirement that the Contractor and all of its Subcontractors shall timely submit complete and accurate certified payroll records with each application for payment, or the District cannot issue payment.

a. Contractor agrees to bind every Subcontractor by terms of the Contract as far as those terms are applicable to Subcontractor's work including, without limitation, all provisions and requirements of the LCP, if an LCP is in force on this Project. If Contractor shall subcontract any part of the Contract, Contractor shall be as fully responsible to District for acts and omissions of any Subcontractor and of persons either directly or indirectly employed by any Subcontractor, as it is for acts and omissions of persons directly employed by Contractor. The divisions or sections of the Specifications are not intended to control the Contractor in dividing the Work among Subcontractors or limit the work performed by any trade.

b. If the District and/or the California Department of Industrial Relations has an LCP in force on this Project and if not previously submitted as required herein, Contractor and all Subcontractors shall provide all remaining certified payroll record ("CPR(s)") for each journeyman, apprentice, worker, or other employee employed by the Contractor and/or each Subcontractor in connection with the Work for the period of the Application for Payment. As indicated herein, if there is an LCP in force on this Project, District shall not make any payment to Contractor until:

i. Contractor and/or its Subcontractor(s) provide CPRs acceptable to the District, and

ii. District and/or the LCP is given sufficient time to review and/or audit the CPRs to determine their acceptability. Any delay in Contractor and/or its Subcontractor(s) providing CPRs to District in a timely manner will directly delay District's review and/or audit of the CPRs and Contractor's payment.

c. Labor Compliance Monitoring

Effective January 1, 2012, the California Department of Industrial Relations (DIR) began operating a labor Compliance Monitoring Unit or "CMU" to monitor and enforce prevailing wage requirements on public works projects that receive state bond funding and on other projects that are legally required to use the CMU. (More information available at: https://www.dir.ca.gov/dlse/cmu/cmu.html.)

To monitor prevailing wage requirements on District projects, Contractors must submit their certified payroll data directly to the DIR. The DIR has utilized a third party vendor to provide the electronic certified payroll service – "My LCM". Contractor payroll data can be entered manually or uploaded from major construction accounting and payroll programs into the electronic certified payroll reporting (My LCM) service at the DIR.

The service must be used by all awarding bodies and contractors for projects subject to CMU monitoring and enforcement for contracts awarded on or after January 1, 2012. A link is established for electronic certified payroll at https://app.mylcm.com. The site includes step-by-step instructions on how to assign contractors, manage employee profiles and submit payroll reports. (More information available at:
https://www.dir.ca.gov/dlse/cmu/How_do_I_file_electronic_payroll_reports.html.)

ITEM # 5: SPECIFICATION SECTION 00800 – SUPPLEMENTAL CONDITIONS

Revise Item: Revise Specification section 00800: Revise item #2 Date by which Contractor Must provide Submittal *"Fourteen(14) Days from the District's issuance of a Notice to Proceed* for all six submittal items.

ITEM # 6: SPECIFICATION SECTION 01010 – SCOPE OF WORKS

Revise Item: Revised Specification section 283100. The only acceptable substitute fire alarm control panel is Silent Knight IFP-2000.

Add Item: Include one (1) wireless clock in each classroom, one (1) in each office, and one (1) transmitter for the site per specification section 27 2900. (6 pages)

Add Item: Alternate # 3. Provide an Intrusion Detection System including all system components outlined in specifications section 281600 attached.

ITEM # 7: SPECIFICATION SECTION 01230 – ALTERNATES

Revise Item: 3.1 Schedule of Alternates, Item C: Alternate Bid No. 3 (Provide an Intrusion Detection System)

ITEM # 8: PRE-BID REQUEST FOR INFORMATION

Add Item: RFI #PB-0001 through #PB-0006.

gkkworks

2355 Main Street | Suite 220 | IRVINE | CA 92614
949 250 1500 | 949 955 2708 FAX | www.gkkworks.com

Addendum #1

Date: January 20, 2012

Project: **Muir** Elementary School
Modernization
1951 Mabury Street
Santa Ana, California 92705

Project A# No.: 04-110031

This addendum shall include any modification of the work or additional work that the bidder may be required to perform by reason of this Addendum. All work under this Addendum shall be governed by the main project drawings and specifications for such work and it shall be the general contractor's responsibility to provide this information to all of the sub-contractors for a final price, which will be reflected in the bid proposal for the project.

In general, this addendum changes the DSA approved drawings and specifications by reducing the scope of work.

Addendum 1 includes two sections 1A & 1B. Section 1A is a description of revisions to DSA approved drawings and specifications issued in the original bid documents and noted on the bid documents. Section 1B is a description of additional drawing and specification revisions issued subsequent to the original bid document submittal and not shown on the original bid documents. Sections 1A and 1B together comprise Addendum 1.

Item #	Reference:	Description:

(1A)- ITEMS INCLUDED IN BID PACKAGE

ARCHITECTURAL:

1. Sheet G0.1 Drawing Index:
   1. Delete Sheets SP1, A.1, C.1 and B.1.
   2. Delete Sheets E0.5, E0.6, E1.2, E4.1, E4.2, E4.3, and E4.4.
2. Sheet 1-A-2_01 Building 1 Demolition and Floor Plans:
   1. Delete Renovation Keynotes 20 and 31.
   2. Delete "Condensing unit on housekeeping pad, see mech. dwgs." Note at Detail 2, Building 1 Floor Plan, Grid Lines 1-2 / B-D.
3. Sheet 2-A-2_02 Building 2 Floor Plan:
   1. Delete Renovation Keynotes 20 and 31.

gkkworks

2355 Main Street | Suite 220 | IRVINE | CA 92614
949 250 1500 | 949 955 2708 FAX | www.gkkworks.com

2. Delete Keynotes 20 and 31 at Classrooms 117, 118, Special Ed. 120 & 121.
3. Delete note "Fan coil unit, see mech. dwgs." At A.V. Equip. 27, Grid Lines 9-10 / G-J.

4. Sheet 3-A-2_01 Building 3 Demolition and Floor Plans:
1. Delete Renovation Keynotes 20 and 31.
2. Delete Keynotes 20 and 31 at Kindergarten 104 & 105.

5. Sheet 4-A-2_01 Building 4 Demolition and Floor Plans:
1. Delete Renovation Keynotes 20 and 31.
2. Delete Keynotes 20 and 31 at Special Ed. 101, 102, 103.
3. Delete "Condensing unit on housekeeping pad, see mech. dwgs." Note at Detail1 and 2.

6. Sheet 5-A-2_01 Building 5 Demolition and Floor Plans:
1. Delete Renovation Keynotes 20 and 31.
2. Delete Keynotes 20 and 31 at Classrooms 113, 114, 115 & 116.

7. Sheet 6-A-2_01 Building 6 Demolition and Floor Plans:
1. Delete Renovation Keynotes 20 and 31.
2. Delete Keynotes 20 and 31 at Classrooms 106, 107, 108, 109, 110, 111, 112A & 112B.

8. Sheet 7-A-2_01 Building 7 Demolition and Floor Plans:
1. Delete Renovation Keynotes 20 and 31.
2. Delete Keynotes 20 and 31 at Classrooms 122, 123, 124, 125, 126, 127, 128 & 129.
3. Delete "Condensing unit, see mech. dwgs." Note at Detail 1.

9. Sheet A4.0 Roof Plans Buildings # 2, 6 & 7.
1. Delete "Condensing unit, see mech. dwgs." Note at Details 1, 2 & 3.

10. Sheet A9.03 Typical Details and Site Details:
1. Delete Details 23 and 28.

ELECTRICAL:

10. Sheet E0.1
1. Deleted sheets E0.5, E1.2 and E4.1 through E4.4 on drawing list.
2. Added notation that device mounting detail only applies to new receptacles.
3. Deleted notes a and b under E-rate related low voltage items and added notation "by E-Rate Contractor and Owner."

11. Sheet ED2.1
1. Deleted key note #2 on plan details #1 and #2.
2. Note: all existing receptacles are to remain.

gkkworks

2355 Main Street | Suite 220 | IRVINE | CA 92614
949 250 1500 | 949 955 2708 FAX | www.gkkworks.com

12. Sheet ED2.2
    1. Deleted key note #2.
    2. Note: all existing receptacles are to remain.
13. Sheet ED2.3
    1. Deleted key note #2 on details #1 and #2.
    2. Note: all existing receptacles are to remain.
14. Sheet ED2.4
    1. Note: all existing receptacles are to remain.
15. Sheet ED2.5
    1. Note: all existing receptacles are to remain.
16. Sheet E3.1
    1. Deleted CU-1 power connection.
17. Sheet E3.2
    1. Deleted power connection to CU-2, CU-3, FC-2 and FC-3.
    2. Provided power connections to hand dryers in Boy's and Girl's Rooms. Provide circuit, wire and conduit from nearest available panel.
18. Sheet E3.3
    1. Deleted power connection to FC-4 in Electrical Room 07, detail #2.
    2. Provided power to electric hand dryer in Toilet Room 09.
    3. Provide circuit, wire and conduit from nearest available panel.
19. Sheet E3.4
    1. Deleted power connection to CU-5, CU-6, FC-5 and FC-6.
    2. Deleted note #1 on details #1 and #2.

PLUMBING:

23. Sheet P2.1 Building 1 Remodel Plan
    1. Detail 2: removed fan coil and condensate drain connecting to lavatory in Restroom 105.
    2. Removed key notes #1 and #2 which referred to condensate drain.
24. Sheet P2.2 Building 2 Remodel Plan
    1. Detail 1: Removed fan coil condensate drain in Rooms 25 and 27 spilling to drywell outside of Room 27.
    2. Detail 1: Removed notes and detail callouts referring to condensate drain/dry well.
    3. Removed key note 1 which referred to condensate drain.
25. Sheet P2.4 Building 4 Remodel Plan
    1. Detail 2: Removed fan coil and condensate drain connecting to sink in Room 09.
    2. Removed key notes #1 and #2 which refer to condensate drain.
26. Sheet P2.6 Building 6 Remodel Plan

gkkworks

2355 Main Street | Suite 220 | IRVINE | CA 92614
949 250 1500 | 949 955 2708 FAX | www.gkkworks.com

1. Detail 2: Removed fan coil and condensate drain in Room 113 spilling to dry well outside of Room 113A.
2. Removed notes and detail callouts referring to condensate drain and dry well.
3. Removed key note 1 which refers to condensate drain.

27. Sheet P2.7 Building 7 Remodel Plan
    1. Detail 2: Removed fan coil and condensate drain in Room 132 spilling to drywell outside room 132.
    2. Detail 2: Removed notes and detail callouts referring to condensate and drywell.
    3. Removed key note 1 which refers to condensate drain.
28. Sheet P3.1 and 134 Building 7 Enlarged Remodel Plan Detail 4 – Boys and Girls Rooms 133
    1. Added note "to be mounted at accessible height (Elementary)" to urinals in Restroom 134.

MECHANICAL:

1. Sheet M0.2 Equipment Schedule
    1. Delete Ductless Air Conditioner Schedule – Indoor Unit from scope.
    2. Delete Ductless Air Conditioner Schedule – Outdoor Unit from scope.
2. Sheet M2.1 Building 1 Remodel Plan
    1. Cot 104: Delete FC-1/CU-1 work along with refrigerant lines.
    2. Delete Remodel Key Notes 3 and 4.
3. Sheet M2.2 Building 2 Remodel Plan
    1. Book Storage 16: Delete FC-3/CU-3 work along with refrigerant lines.
    2. AV Equipment 27: Delete FC-2/CU-2 work along with refrigerant lines.
    3. Delete Remodel Key Notes 1, 2 and 6.
4. Sheet M2.3 Building 4 Remodel Plan
    1. Electrical Room 07: Delete FC-4/CU-4 work along with refrigerant lines.
    2. Delete Remodel Key Notes 1 and 2.
5. Sheet M2.4 Building 6 & 7 Remodel Plans
    1. Building 7 Remodel Plan: Janitor Room - Delete FC-5/CU-5 work along with refrigerant lines.
    2. Building 6 Remodel Plan: Electrical Room 13 – Delete FC-6/CU-6 along with refrigerant lines.
    3. Delete Remodel Key Notes 1 and 5.

gkkworks

2355 Main Street | Suite 220 | IRVINE | CA 92614
949 250 1500 | 949 955 2708 FAX | www.gkkworks.com

Item #	Reference:	Description:

(1A) Specifications:

6. Division 15: Mechanical
    1. Section 15010 General Provisions, Mechanical - Replace in its entirety
    2. Section 15140 Supports and Anchors - Replace in its entirety
    3. Section 15190 Mechanical Identification - Replace in its entirety
    4. Section 15260 Mechanical Piping Insulation - Replace in its entirety
    5. Section 15410 Plumbing Piping and Valves - Replace in its entirety
    6. Section 15430 Plumbing Specialties - Replace in its entirety
    7. Section 15440 Plumbing Fixtures - Replace in its entirety
    8. Section 15535 Refrigerant Piping and Specialties - Replace in its entirety
    9. Section 15783 Split Type Air Conditioning Units - Replace in its entirety
    10. Section 15870 Power Ventilators - Replace in its entirety
    11. Section 15890 Ductwork - Replace in its entirety
    12. Section 15910 Ductwork Accessories - Replace in its entirety
    13. Section 15936 Air Outlets and Inlets - Replace in its entirety
    14. Section 15991 Testing, Adjusting and Balancing - Replace in its entirety
7. Division 16 – Electrical
    1. Sections 16050-1.063A, 16120-1.02A, 16420-1.04A, 16429-1.03A, 16450-1.04A, 16509-1.03A Sheet E1.2 Referenced to Specification Section 01302 Submittals.
    2. Section 16110-3.01D Referenced to Specification Section 07920 Sealants and Caulking.
    3. Section 16420-1.02A Referenced to Specification Section 02222 Excavating, Backfilling and Compacting.
    4. Section 16470-1.02C Referenced to Specification Section 16455 Power Centers was deleted.
    5. Section 16509-3.01 G.1 Referenced to Specification Section 02520 Site Concrete Work is missing from the project manual.
    6. Section 16720-1.02D Referenced to Specification Section 16715 Fire Alarm Systems.
    7. Section 16772-1.02B Referenced to Specification Section 16111 Conduit
    8. Section 16790-1.02.1 is referenced to Specification Section 01720 Project Record Documents.
    9. Section 16720 General – Spec indicates Intrusion Detection System, deleted.
    10. Section 16721 Sec 1.06.C, Spec indicates interface to Special Extinguishing System, deleted.

gkkworks

2355 Main Street | Suite 220 | IRVINE | CA 92614
949 250 1500 | 949 955 2708 FAX | www.gkkworks.com

11. Sec 1.07.F.2.d, spec indicates interface to Special Extinguishing System, deleted.
12. Spec indicates interface to Elevator recall and power disconnect, deleted.

Item #	Reference:	Description:

(1B) ITEMS NOT INCLUDED IN BID PACKAGE

ARCHITECTURAL:

20. Sheet 1-A-2_01 — Building 1 Demolition and Floor Plans
    1. Dtl. 1: Add demolition key note 6 to N.W. Hallway door & ext. door at speech Rm. 113.
    2. Dtl. 1: Add key note 5 to ext. door at speech Rm. 113.
    3. Dtl. 1: Delete demolition key note 8 at RR doors.
21. Sheet 2-A-2_01 — Building 2 Demolition Plan:
    1. Add demolition key note 6 to exterior doors at Rooms. 25, 119 & 120.
22. Sheet 5-A-2_01 — Building 5Demolitionand Floor Plans:
    1. Add interior elevation detail reference 23/A2.6 for millwork at classrooms 113 to 116. Refer to ASK-1.0 (attached) for elevation.
23. Sheet 6-A-2_01 — Building 6 Floor Plan:
    1. Delete key note 32 at grid line 6 between D&E.
24. Sheet 7-A-2_01 — Building 7 Demolition and Floor Plans:
    1. Add millwork elevation detail reference 23B/A2.6 to millwork at classrooms 122 to 127. See ASK-1.0 (attached) for elevation
25. Sheet A2.5 — Enlarged toilet room Plan, Details & Elevations (Typical)
    1. Dtl. 29D & 30B: Replace paper towel dispenser with recessed electric hand dryer at both boy's & girl's restrooms, per key note 45. Install @ elementary dimensions per approved detail 21/A2.5.
26. Sheet A2.6 — Enlarged toilet room Plan, Details & Elevations (Typical)
    1. Dtl. 29A & 30C: Provide one recessed electric hand dryer at both boy's & girl's restrooms. Per key note 45 & Install @ elementary dimensions per approved detail 21/A2.5.
27. Sheet A4.0 — Roof Plans buildings #2, 6 & 7

gkkworks

2355 Main Street | Suite 220 | IRVINE | CA 92614
949 250 1500 | 949 955 2708 FAX | www.gkkworks.com

1. Dtl 1,2& 3: (N) condensing Units N.I.C. – remove note from plan.

28. Sheet A-8.01 Schedules, notes Door & Window types:
1. Remove threshold detail 7 remark from doors 113 & 132.

ELECTRICAL:

1. Sheet E0.1 General Notes, Drawing List, Applicable Codes and Standards
   1. Added General Notes #42, #43 and #44:
      "42. Extra Devices
      Due to unforeseen condition, the following extra devices shall be included in the contractors bid:
      a. Smoke Detectors 7 each/building
      b. Heat Detectors 7 each/building
      c. Strobe/horn (Exterior/Interior) 2 each/building
      For bid purposes, allow twenty (2) feet of conduit and its support system to include fittings, wires and labor for each of the devices listed above.

      43. Contractor shall re-secure all reuse existing conduits and boxes per Code.

      44. All new light fixtures reconnected to the portions of existing circuit to remain shall be provided with new WHIP."
2. Sheet E0.5 Audio/Video Pole Vault System Block Diagram
   1. Audio/video system is N.I.C. Delete entire sheet from the set.
3. Sheet ED2.1 Building 1 and 5 Demolition Plan
   1. All existing duplex receptacles are to remain.
   2. Voice/data and PA systems demolition scope are N.I.C.
4. Sheet ED2.2 Building 2 Demolition Plan
   1. All existing duplex receptacles are to remain.
   2. Voice/data and PA systems demolition scope are N.I.C.
5. Sheet ED2.3 Buildings 3 and 4 Demolition Plan
   1. All existing duplex receptacles are to remain.
   2. Voice/data and PA systems demolition scope are N.I.C.
6. Sheet ED2.4 Building 6 Demolition Plan
   1. All existing duplex receptacles are to remain.
   2. Voice/data and PA systems demolition scope are N.I.C.
7. Sheet ED2.5 Building 7 Demolition Plan
   1. All existing duplex receptacles are to remain.
   2. Voice/data and PA systems demolition scope are N.I.C.
8. Sheet E3.1 Buildings 1 and 5 Power Plans
   1. Deleted power connection to condensate pump and FC-1.
   2. Coordinated panel schedule RI-22 to reflect RPS-5 circuit.

gkkworks

2355 Main Street | Suite 220 | IRVINE | CA 92614
949 250 1500 | 949 955 2708 FAX | www.gkkworks.com

3. Circuit homerun R2-14, 16 is correct, Classroom 11 & revised receptacle circuits to reflect 14 & 16. Coordinated circuits on E6.0 panel schedule. (Typical for R1, R3 and R4, Classrooms 113, 115 and 116 respectively.)
4. Provided power and reflected on plan electric hand dryers in Men's 110 and Women's 111.
5. Provided power to garbage disposer in staff lounge.

9. Sheet E3.2 Building 2 Partial Power Plans
   1. Deleted ceiling receptacle in Room 119.
   2. Provided power to electric hand dryers in Boy's Room 12 & Girl's Room 10.
   3. Deleted power to condensate pumps for FC-2 and FC-3.
   4. Panel "MP2" schedule is provided on Sheet E6.0 to complement circuit homeruns in Special Ed 120 & 121, and AV Equipment 27.
   5. Deleted Circuit #24 to WP.
10. Sheet E3.3 Buildings 3 and 4 Partial Power Plans
    1. Deleted power connection to condensate pump in Electric 07, Detail #2.
11. Sheet E3.4 Buildings 6 and 7 Power Plan
    1. Deleted power to condensate pumps, in Jan. 132 and Elec. 113.

Item #	Reference:	Description:

(1B) SPECIFICATIONS : ITEMS NOT IN BID SET

8520 Part 2.2.1:
1. Replace EFCO Corp. as listed window Manufacturer with Arcadia .

16721 Add to section 2.02 A.2:
1. Use only Silent Night IFP-2000 per Districts direction.

281600 Add spec section - Intrusion Detection Systems

Attachment **Description**

ARCHITECTURAL:

2. ASK-1.0 Millwork Elevation. Insert detail as 23 on Sheet A-2.6.

MECHANICAL:

3. MSK-1.0 Reference Sheet M2.2: Delete Sensor relocation work.

4. MSK-1.1 Reference Sheet M2.3: Delete Remodel Key Note 3.

gkkworks

2355 Main Street | Suite 220 | IRVINE | CA 92614
949 250 1500 | 949 955 2708 FAX | www.gkkworks.com

5. MSK-1.2 Reference Sheet M2.4 Delete louver work in Electrical Room 113.

6. MSK-1.3 Reference Sheet M2.4 Delete all work in Janitor 132. Delete Remodel Key Notes 2, 3, and 4.

7. MSK-1.4 Reference Sheet M3.0: Detail 7 - Added Detail Reference.

8. MSK-1.5 Reference Sheet M3.0: Detail 8 – Revised Detail Reference.

9. MSK-1.6 Reference Sheet M3.0: Detail 10 – Added note regarding flashing.

10. PSK-1.0 Reference Sheet P2.1: Detail 1 – Existing lavatory callout indicated on southside wall in Restroom 111.

11. PSK-1.1 Reference Sheet P2.6: Detail 1 – added key note 2 callout and hatching to indicate demolition of existing sink in Room 111. Detail 2 – added key note sink callout to indicate installation of sink in Room 111.

REPLACEMENT SHEETS:
Electrical sheets: Per Sheet List in Addendum 1B.

END OF ADDENDUM NO.1

K:\Santa Ana USD\10021-010_Muir Fundamental\Proj_Mngt\CA_Docs\Bids_&_Negotiations\
10021_008_MUIR_addendum1_DSA

NOTES
FAUCET CONTROLS AND OPERATING MECHANISMS SHALL BE OPERABLE WITH ONE HAND AND SHALL NOT REQUIRE TIGHT GRASPING, PINCHING OR TWISTING OF THE WRIST.
THE FORCE REQUIRED TO ACTIVATE CONTROLS SHALL BE NO MORE THAN 5 LBS.
LEVER OPERATED, PUSH TYPE AND ELECTRONICALLY CONTROLLED MECHANISMS ARE ACCEPTABLE.
SELF CLOSING VALVES ARE ALLOWED IF THE FAUCET REMAINS OPEN FOR AT LEAST 10 SECONDS.

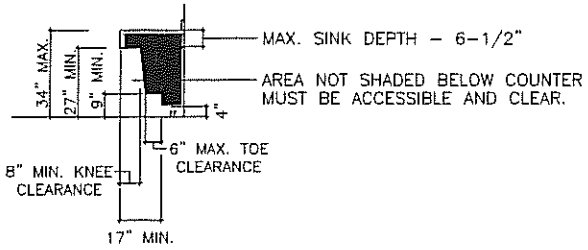

SECTION AA

BLDG. 5 CLASSROOMS ADD ADDITIONAL BASE CABINET (W.I.C. 102)

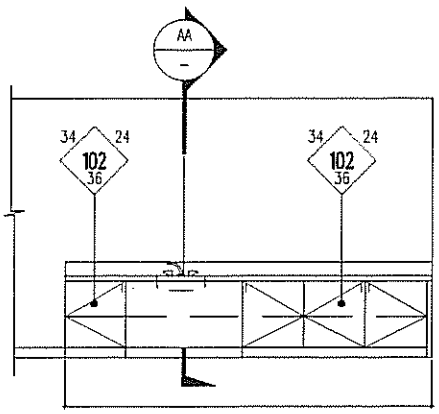

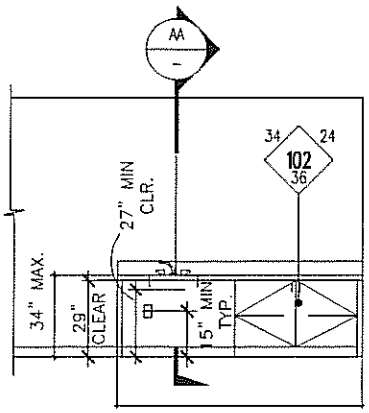

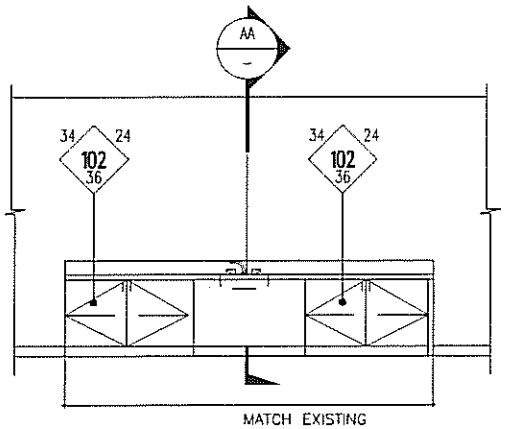

SEE DETAILS 6,7 &11/A9.03 FOR MILLWORK SECTIONS & DIMENSIONS

A. SPECIAL ED. B. CLASS ROOM C. KINDERGARTEN

BLDG. 5 CLASSROOMS ADD ADDITIONAL BASE CABINET (W.I.C. 102)

DIVISION OF THE STATE ARCHITECT
APPL # 04-110033
FILE #
AC FLS
SSS DATE
IDENTIFICATION STAMP

gkkworks
2355 Main Street | Suite 220
IRVINE | CA 92614
949 250 1500 | 949 955 2708 fax

LICENSED ARCHITECT
GUILLERMO AGUILAR
NO. C13165
REN.: MAY. 2013
STATE OF CALIFORNIA

Prepared By	Scale	Issue Date	Project Number
	AS NOTED	1/20/2012	10021-002-00

Project Title
DSA APPLICATION NO: 04-110033
MUIR ELEMENTARY MODERNIZATION
SANTA ANA UNIFIED SCHOOL DISTRICT

Drawing Name
MILLWORK ELEVATIONS
1B
Reference MODIFIES SHEET A2.6 – NEW DTL 23

Sheet Number
ASK-1.0

\Santa Ana USD\10021-010_Muir Fundamental\Deliverables\CAD\A_Arch\10021_010_A-2.6.dwg, Layout1, 1/20/2012 9:13:22 AM, Bluebeam PDF

REMODEL KEY NOTES

1. ~~REFRIGERANT PIPING IN CEILING SPACE. SEE EQUIPMENT SCHEDULES FOR SIZES. SEE 6/M3.0.~~
2. ~~REFRIGERANT PIPING UP TO CONDENSING UNIT ON ROOF, SEE 10/M3.0.~~
3. PATCH AND REPAIR CEILING AS REQUIRED. (1A)
4. ~~REMOVE EXISTING SENSOR. PATCH AND REPAIR WALL AS REQUIRED. PROTECT FOR FUTURE USE.~~ (1B)
5. ~~NEW LOCATION OF EXISTING SENSOR.~~ (1A)
6. ~~REFRIGERANT PIPING ON ROOF, SEE 9/M3.0.~~
7. FOR DUCT SUPPORT DETAIL, SEE 8/M3.0.

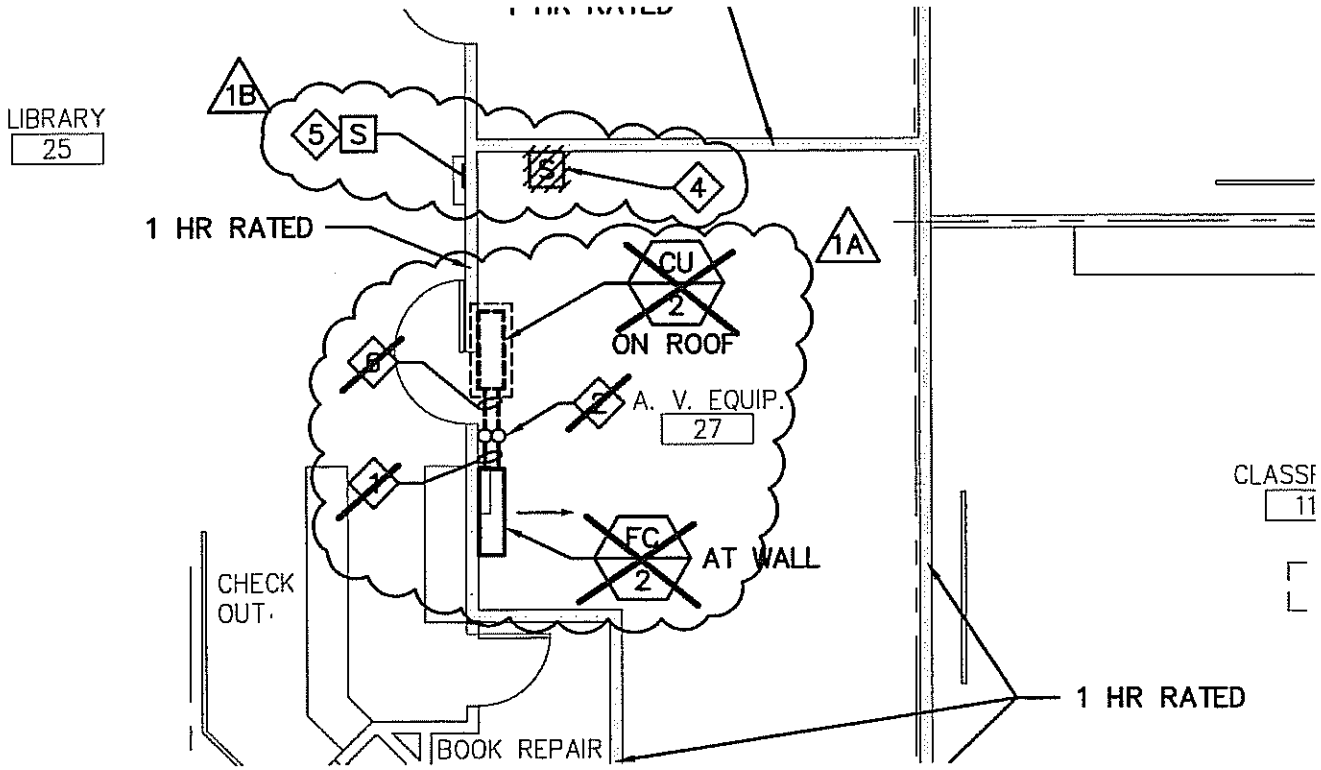

TTG
- STRUCTURAL
- MECHANICAL
- ELECTRICAL
- CIVIL

TMAD TAYLOR & GAINES
901 Via Piemonte, Suite 400
Ontario, California 91764
Phone: 909.477.6915 Fax: 909.477.6916
www.ttgcorp.com

Project No. 2008.125.00

REGISTERED PROFESSIONAL ENGINEER
CHRIS E. RADTKE
No.M24519
Exp. 09/30/12
MECHANICAL
STATE OF CALIFORNIA

N

DIVISION OF THE STATE ARCHITECT
APPL # 04-110031
FILE #
AC FLS
SSS DATE
IDENTIFICATION STAMP

gkk
2355 Main Street | Suite 220
IRVINE | CA 92614
949 250 1500 | 949 955 2708 fax

LICENSED ARCHITECT
GUILLERMO AGUILAR
NO. C13165
REN.: MAY, 2011
STATE OF CALIFORNIA

Prepared By	Scale	Issue Date	Project Number
JHC	1/8"=1'-0"	01-20-12	10021-010

Project Title
DSA APPLICATION NO: 04-110031
MUIR FUNDAMENTAL ELEMENTARY MODERNIZATION
SANTA ANA UNIFIED SCHOOL DISTRICT

Drawing Name
BUILDING 2 REMODEL PLAN

Reference M2.2

Sheet Number
MSK-1.0

REMODEL KEY NOTES

1. ~~RUN REFRIGERANT LINES IN CEILING. SEE EQUIPMENT SCHEDULE FOR SIZES. SEE 6/M3.0~~
2. ~~REFRIGERANT LINES THRU EXTERIOR WALL. RUN REFRIGERANT LINES TIGHT TO WALL DOWN TO CU-4, SEE 11/M3.0. PAINT TO MATCH ADJACENT WALL.~~ 1A
3. ~~FOR PIPES THRU FIRE RATED PENETRATIONS SEE DETAIL 4/M3.1.~~ 1B

TTG
- STRUCTURAL
- MECHANICAL
- ELECTRICAL
- CIVIL

TMAD TAYLOR & GAINES
901 Via Piemonte, Suite 400
Ontario, California 91764
Phone: 909.477.6915 Fax: 909.477.6916
www.ttgcorp.com

Project No. 2008.125.00

REGISTERED PROFESSIONAL ENGINEER
CHRIS E. RADTKE
No.M24519
Exp. 09/30/12
MECHANICAL
STATE OF CALIFORNIA

DIVISION OF THE STATE ARCHITECT
APPL # 04-110031
FILE #
AC FLS
SSS DATE
IDENTIFICATION STAMP

gkkworks
2355 Main Street | Suite 220
IRVINE | CA 92614
949 250 1500 | 949 955 2708 fax

LICENSED ARCHITECT
GUILLERMO AGUILAR
NO. C13165
REN.: MAY. 2011
STATE OF CALIFORNIA

Prepared By	Scale	Issue Date	Project Number
JHC	NTS	01-20-12	10021-010

Project Title
DSA APPLICATION NO: 04-110031
MUIR FUNDAMENTAL ELEMENTARY MODERNIZATION

SANTA ANA UNIFIED SCHOOL DISTRICT

Drawing Name
BUILDING 4 REMODEL KEY NOTES

Reference M2.3

Sheet Number
MSK-1.1

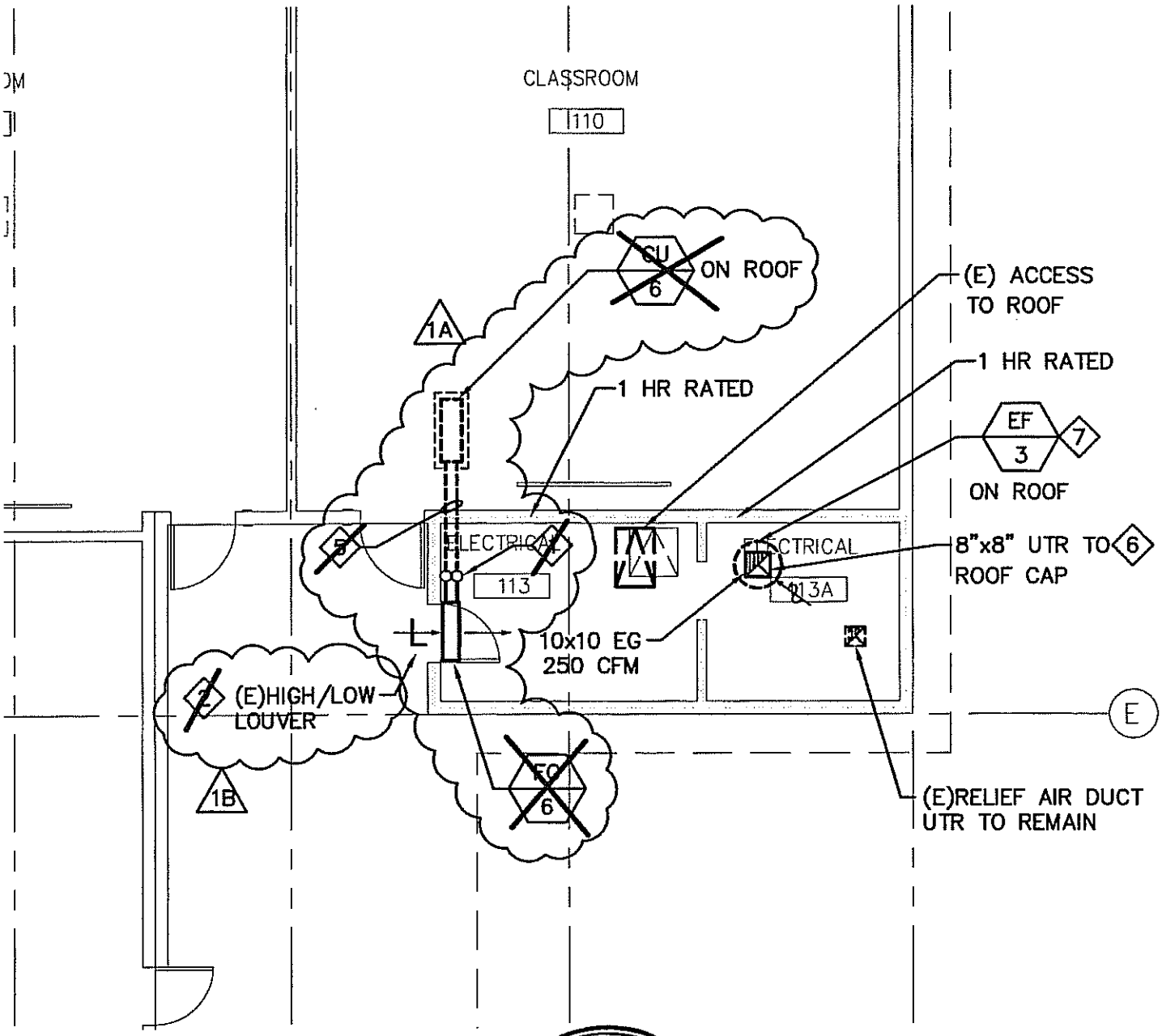

TTG
- STRUCTURAL
- MECHANICAL
- ELECTRICAL
- CIVIL

TMAD TAYLOR & GAINES
901 Via Piemonte, Suite 400
Ontario, California 91764
Phone: 909.477.6915 Fax: 909.477.6916
www.ttgcorp.com

Project No. 2008.125.00

REGISTERED PROFESSIONAL ENGINEER
CHRIS E. RADTKE
No.M24519
Exp. 09/30/12
MECHANICAL
STATE OF CALIFORNIA

N

DIVISION OF
THE STATE ARCHITECT
APPL # 04-110031
FILE #
AC FLS
SSS DATE
IDENTIFICATION STAMP

gkk works
2355 Main Street | Suite 220
IRVINE | CA 92614
949 250 1600 | 949 955 2706 fax

LICENSED ARCHITECT
GUILLERMO AGUILAR
NO. C13165
REN.: MAY. 2011
STATE OF CALIFORNIA

Prepared By	Scale	Issue Date	Project Number
JHC	1/8"=1'-0"	01-20-12	10021-010

Project Title
DSA APPLICATION NO: 04-110031
MUIR FUNDAMENTAL ELEMENTARY MODERNIZATION

SANTA ANA UNIFIED SCHOOL DISTRICT

Drawing Name
BUILDING 7 REMODEL PLAN

Reference M2.4

Sheet Number
MSK-1.2

REMODEL KEY NOTES

1. ~~REFRIGERANT LINES THRU ROOF TO CONDENSING UNIT. SEE EQUIPMENT SCHEDULE FOR SIZES. SEE 10/M3.0.~~ 1A
2. ~~COVER EXISTING LOUVERS WITH 18 GAUGE SHEET METAL ON INTERIOR SIDE OF DOOR.~~
3. ~~REMOVE EXISTING FLY FAN ALONG WITH MICRO SWITCH CONTROLLER.~~
4. ~~CAP EXISTING RELIEF AIR DUCT.~~ 1B
5. ~~REFRIGERANT LINES ON ROOF. SEE 9/M3.0.~~ 1A
6. FOR DUCT SUPPORT DETAIL, SEE 8/M3.0.
7. TRANSITION DUCT TO EXHAUST FAN ON ROOF AS REQUIRED.

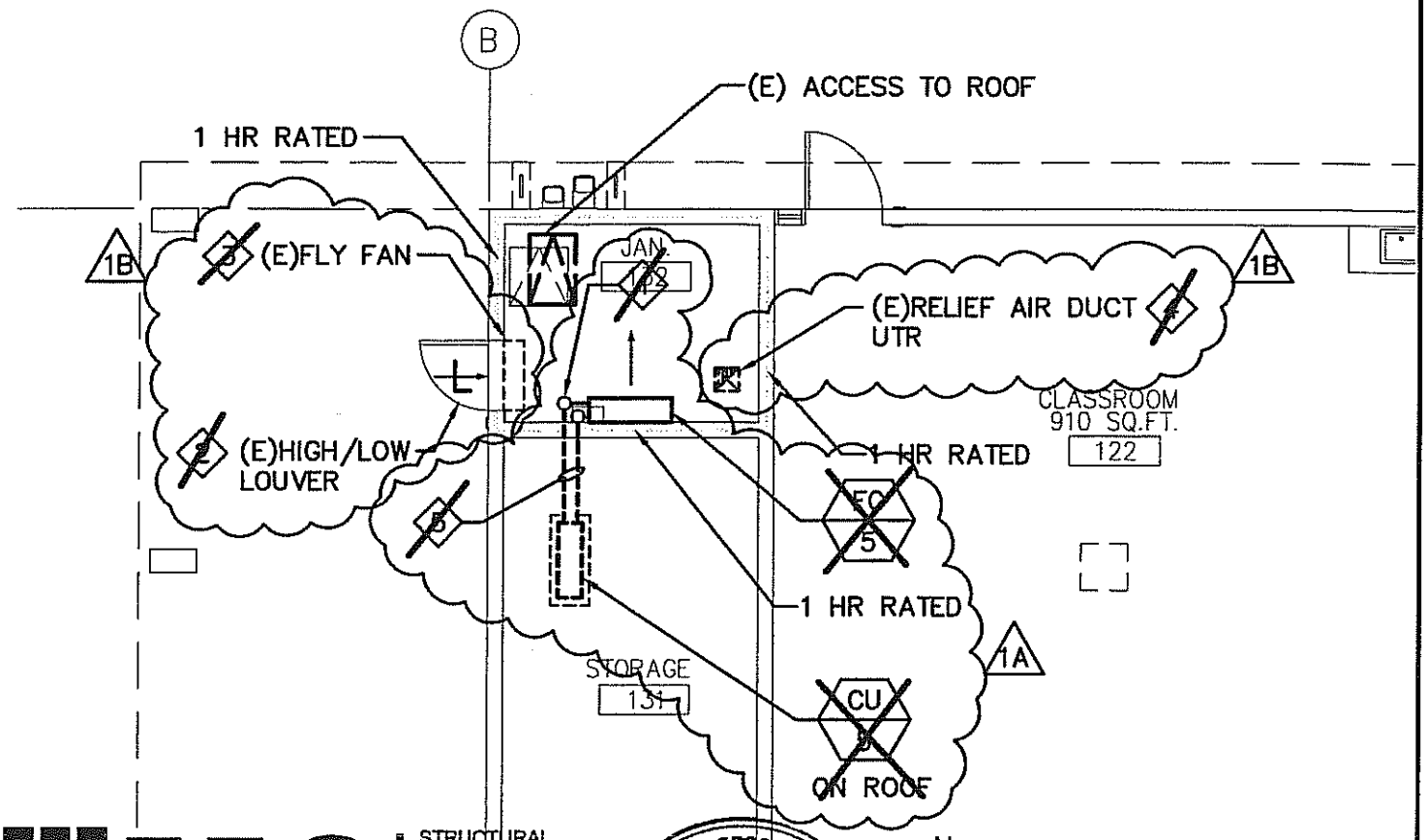

TTG
- STRUCTURAL
- MECHANICAL
- ELECTRICAL
- CIVIL

TMAD TAYLOR & GAINES
901 Via Piemonte, Suite 400
Ontario, California 91764
Phone: 909.477.6915 Fax: 909.477.6916
www.ttgcorp.com

Project No. 2008.125.00

REGISTERED PROFESSIONAL ENGINEER
CHRIS E. RADTKE
No.M24519
Exp. 09/30/12
MECHANICAL
STATE OF CALIFORNIA

DIVISION OF THE STATE ARCHITECT
APPL # 04-110031
FILE #
AC FLS
SSS DATE
IDENTIFICATION STAMP

gkk works
2355 Main Street | Suite 220
IRVINE | CA 92614
949 250 1500 | 949 955 2708 fax

LICENSED ARCHITECT
GUILLERMO AGUILAR
NO. C13165
REN.: MAY. 2011
STATE OF CALIFORNIA

Prepared By	Scale	Issue Date	Project Number
JHC	1/8"=1'-0"	01-20-12	10021-010

Project Title
DSA APPLICATION NO: 04-110031
MUIR FUNDAMENTAL ELEMENTARY MODERNIZATION

SANTA ANA UNIFIED SCHOOL DISTRICT

Drawing Name
BUILDING 6 REMODEL PLAN

Reference M2.4

Sheet Number
MSK-1.3

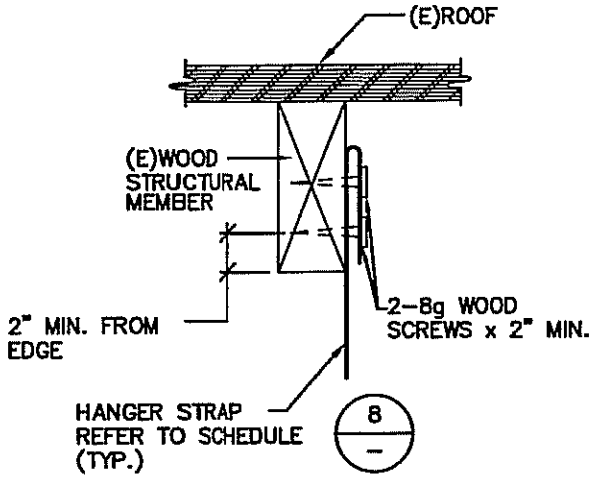

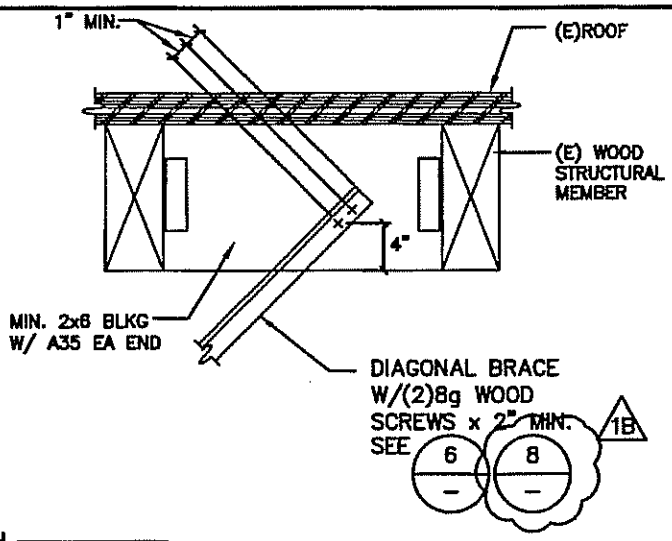

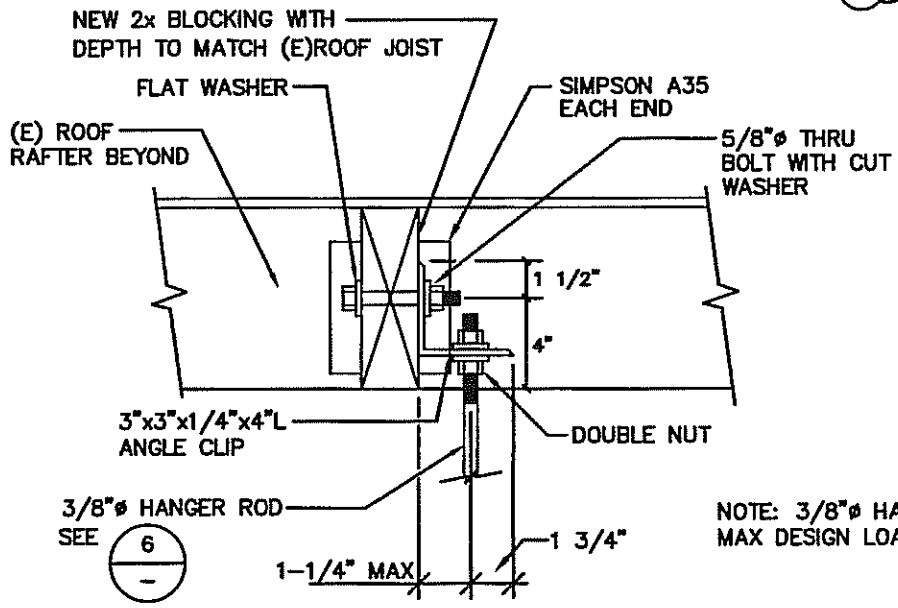

NOTE: 3/8"ø HANGER ROD MAX DESIGN LOAD = 390 LBS.

CONNECTION TO WOOD STRUCTURE

NTS | 7

TTG
- STRUCTURAL
- MECHANICAL
- ELECTRICAL
- CIVIL

TMAD TAYLOR & GAINES
901 Via Piemonte, Suite 400
Ontario, California 91764
Phone: 909.477.6915 Fax: 909.477.6916
www.ttgcorp.com

Project No. 2008.125.00

REGISTERED PROFESSIONAL ENGINEER
CHRIS E. RADTKE
No.M24519
Exp. 09/30/12
MECHANICAL
STATE OF CALIFORNIA

DIVISION OF THE STATE ARCHITECT
APPL # 04-110031
FILE #
AC FLS
SSS DATE
IDENTIFICATION STAMP

gkkworks
2355 Main Street | Suite 220
IRVINE | CA 92614
949 250 1500 | 949 955 2706 fax

LICENSED ARCHITECT
GUILLERMO AGUILAR
NO. C13165
REN.: MAY. 2011
STATE OF CALIFORNIA

Prepared By	Scale	Issue Date	Project Number
JHC	N.T.S.	01-20-12	10021-010

Project Title
DSA APPLICATION NO: 04-110031
MUIR FUNDAMENTAL ELEMENTARY MODERNIZATION
SANTA ANA UNIFIED SCHOOL DISTRICT

Drawing Name
DETAIL
Reference M3.0

Sheet Number
MSK-1.4

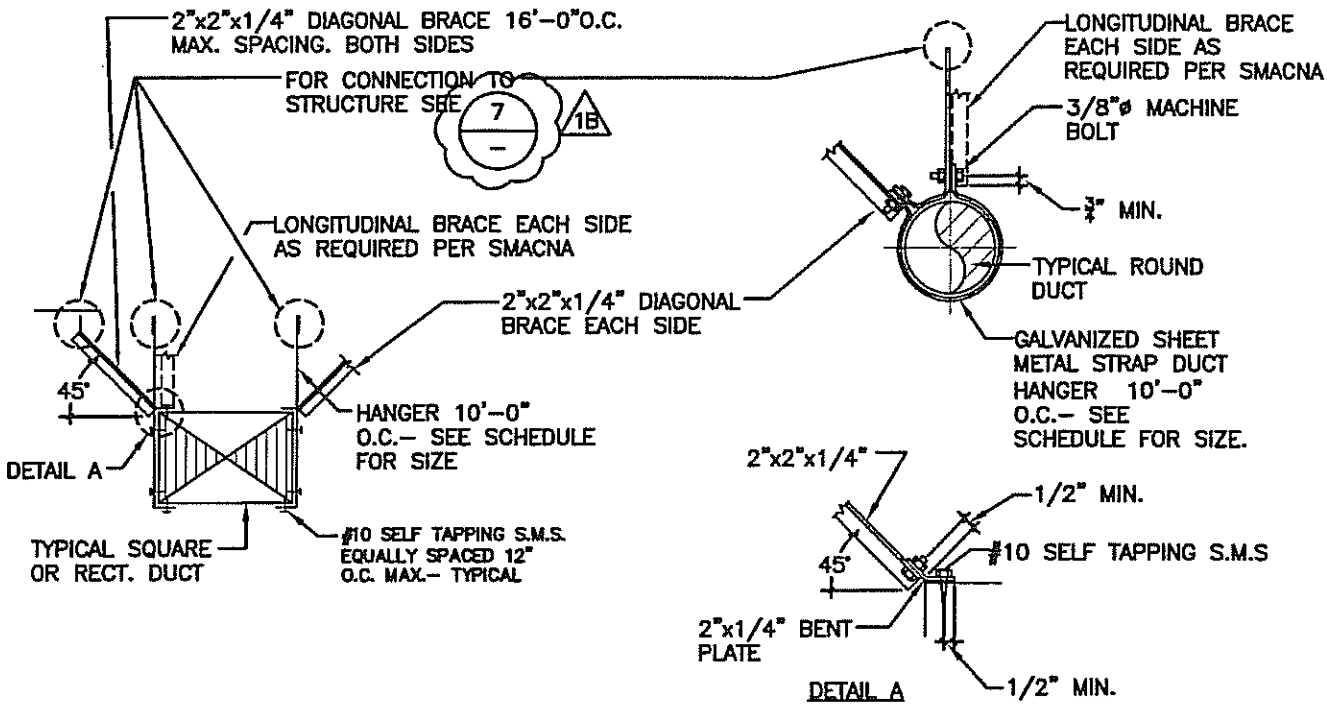

RECTANGULAR DUCT			ROUND DUCT		
MAX. OF DUCT PERIMETER/IN.	STRAP	MAX. LOAD EACH HANGER/LBS.	DIAMETER /INCHES	STRAP	MAX. LOAD EACH HANGER/LBS.
P/2 =72	1"X 20 GA.	20	UP TO 20"	1"X 20 GA.	20
P/2 =96	1"X 18 GA.	30	21" TO 36"	1"X 18 GA.	30

NOTE:

1. NO BRACING REQUIRED IF DUCT IS SUSPENDED 12 INCHES OR LESS IN LENGTH.
2. FOR TRANSVERSE AND LONGITUDINAL BRACING FOLLOW "SMACNA" GUIDELINES FOR SEISMIC HAZARD LEVEL "A".
3. MAXIMUM LENGTH OF DIAGONAL BRACE:
   2"x2"x1/4" ANGLE IRON: 6' – 6"
   3"x3"x1/4" ANGLE IRON: 9' – 6"

DUCT SUPPORT DETAIL

NTS | 8

TTG
- STRUCTURAL
- MECHANICAL
- ELECTRICAL
- CIVIL

TMAD TAYLOR & GAINES
901 Via Piemonte, Suite 400
Ontario, California 91764
Phone: 909.477.6915 Fax: 909.477.6916
www.ttgcorp.com Project No. 2008.125.00

REGISTERED PROFESSIONAL ENGINEER
CHRIS E. RADTKE
No.M24519
Exp. 09/30/12
MECHANICAL
STATE OF CALIFORNIA

DIVISION OF THE STATE ARCHITECT
APPL # 04-110031
FILE #
AC FLS
SSS DATE
IDENTIFICATION STAMP

gkk works
2355 Main Street | Suite 220
IRVINE | CA 92614
949 250 1500 | 949 955 2706 fax

LICENSED ARCHITECT
GUILLERMO AGUILAR
NO. C13165
REN.: MAY. 2011
STATE OF CALIFORNIA

Prepared By	Scale	Issue Date	Project Number
JHC	N.T.S.	01-20-12	10021-010

Project Title
DSA APPLICATION NO: 04-110031
MUIR FUNDAMENTAL ELEMENTARY MODERNIZATION
SANTA ANA UNIFIED SCHOOL DISTRICT

Drawing Name
DETAIL
Reference M3.0

Sheet Number
MSK-1.5

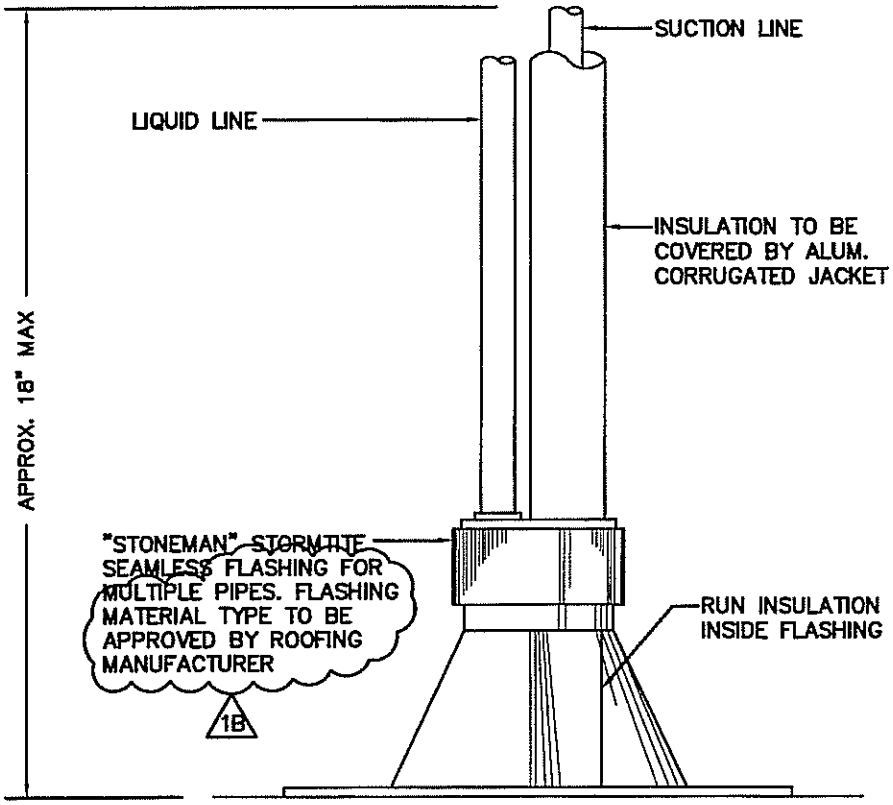

REFRIGERANT PIPING THRU ROOF

NTS | 10

TTG
- STRUCTURAL
- MECHANICAL
- ELECTRICAL
- CIVIL

TMAD TAYLOR & GAINES
901 Via Piemonte, Suite 400
Ontario, California 91764
Phone: 909.477.6915 Fax: 909.477.6916
www.ttgcorp.com

Project No. 2008.125.00

REGISTERED PROFESSIONAL ENGINEER
CHRIS E. RADTKE
No.M24519
Exp. 09/30/12
MECHANICAL
STATE OF CALIFORNIA

DIVISION OF THE STATE ARCHITECT
APPL # 04–110031
FILE #
AC FLS
SSS DATE
IDENTIFICATION STAMP

gkk
2355 Main Street | Suite 220
IRVINE | CA 92614
949 250 1500 | 949 955 2708 fax

LICENSED ARCHITECT
GUILLERMO AGUILAR
NO. C13165
REN.: MAY. 2011
STATE OF CALIFORNIA

Prepared By	Scale	Issue Date	Project Number
JHC	N.T.S.	01–20–12	10021-010

Project Title
DSA APPLICATION NO: 04–110031
MUIR FUNDAMENTAL ELEMENTARY MODERNIZATION
SANTA ANA UNIFIED SCHOOL DISTRICT

Drawing Name
DETAIL
Reference M3.0

Sheet Number
MSK-1.6

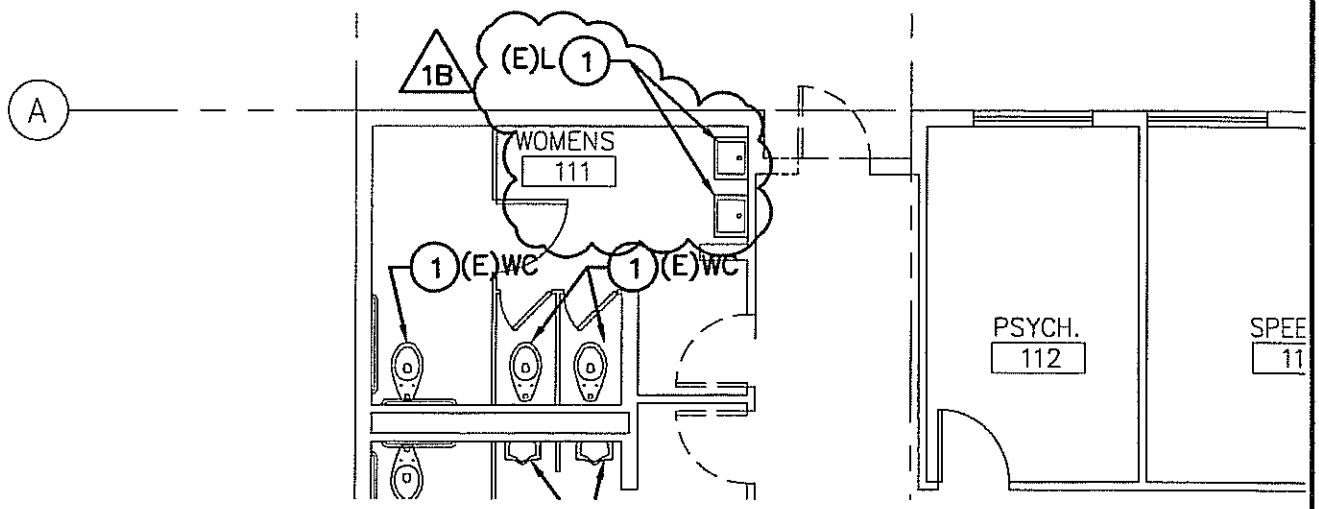

BUILDING 1 - DEMOLITION PLAN

1/8"=1'-0" | 1

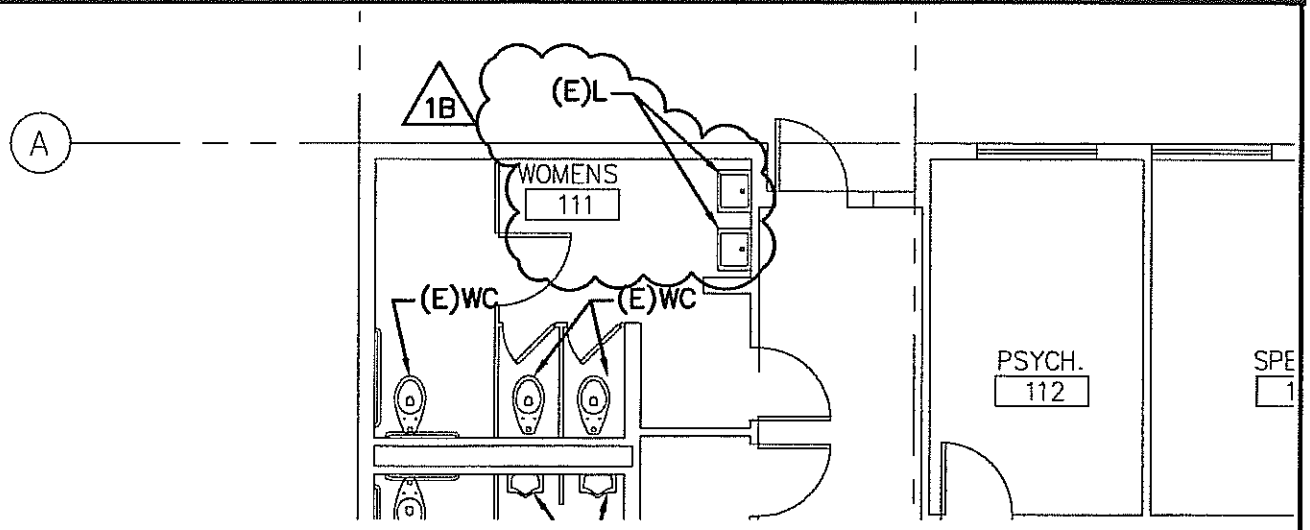

BUILDING 1 - REMODEL PLAN

1/8"=1'-0" | 2

TTG
- STRUCTURAL
- MECHANICAL
- ELECTRICAL
- CIVIL

TMAD TAYLOR & GAINES
901 Via Piemonte, Suite 400
Ontario, California 91764
Phone: 909.477.6915 Fax: 909.477.6916
www.ttgcorp.com Project No. 2008.125.00

REGISTERED PROFESSIONAL ENGINEER
CHRIS E. RADTKE
No.M24519
Exp. 09/30/12
MECHANICAL
STATE OF CALIFORNIA

DIVISION OF THE STATE ARCHITECT
APPL # 04-110031
FILE #
AC FLS
SSS DATE
IDENTIFICATION STAMP

gkkworks
2355 Main Street | Suite 220
IRVINE | CA 92614
949 250 1500 | 949 955 2708 fax

LICENSED ARCHITECT
GUILLERMO AGUILAR
NO. C13165
REN.: MAY. 2013
STATE OF CALIFORNIA

Prepared By	Scale	Issue Date	Project Number
JHC	N.T.S.	01-20-12	10021-010

Project Title
DSA APPLICATION NO: 04-110032
MUIR FUNDAMENTAL SCHOOL MODERNIZATION

SANTA ANA UNIFIED SCHOOL DISTRICT

Drawing Name
BUILDING 1 - DEMOLITION AND REMODEL PLAN

Reference P2.1

Sheet Number
PSK-1.0

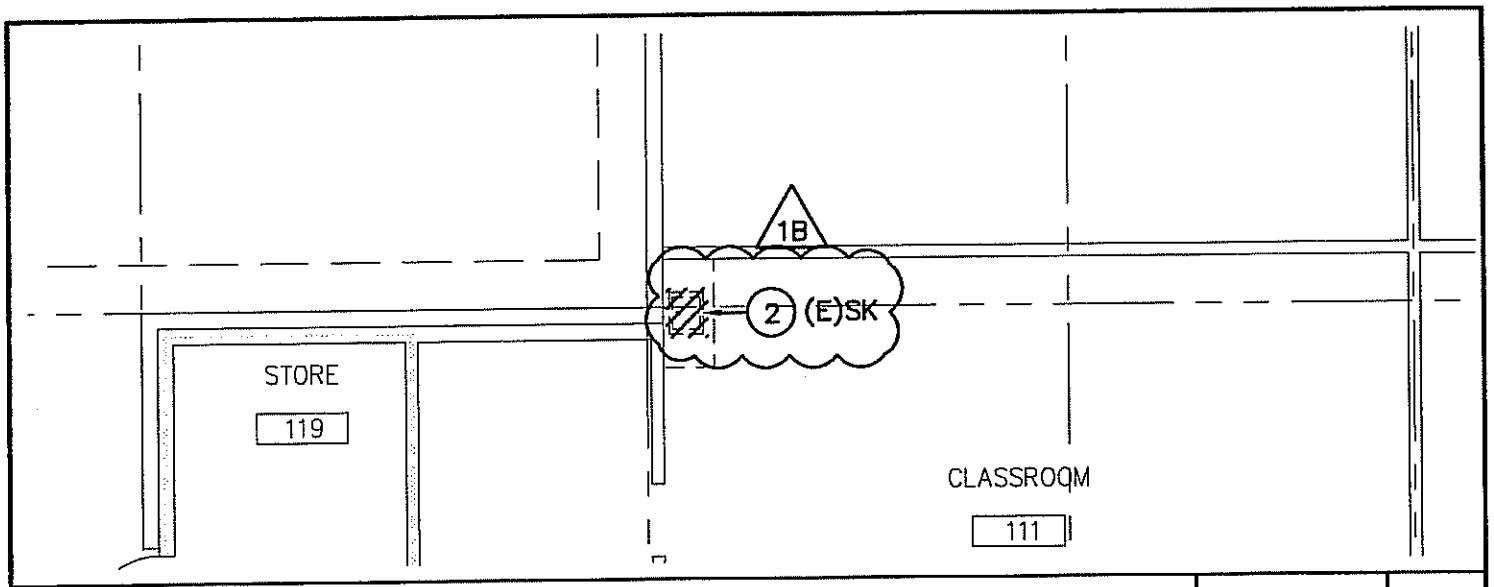

BUILDING 6 - DEMOLITION PLAN

1/8"=1'-0" | 1

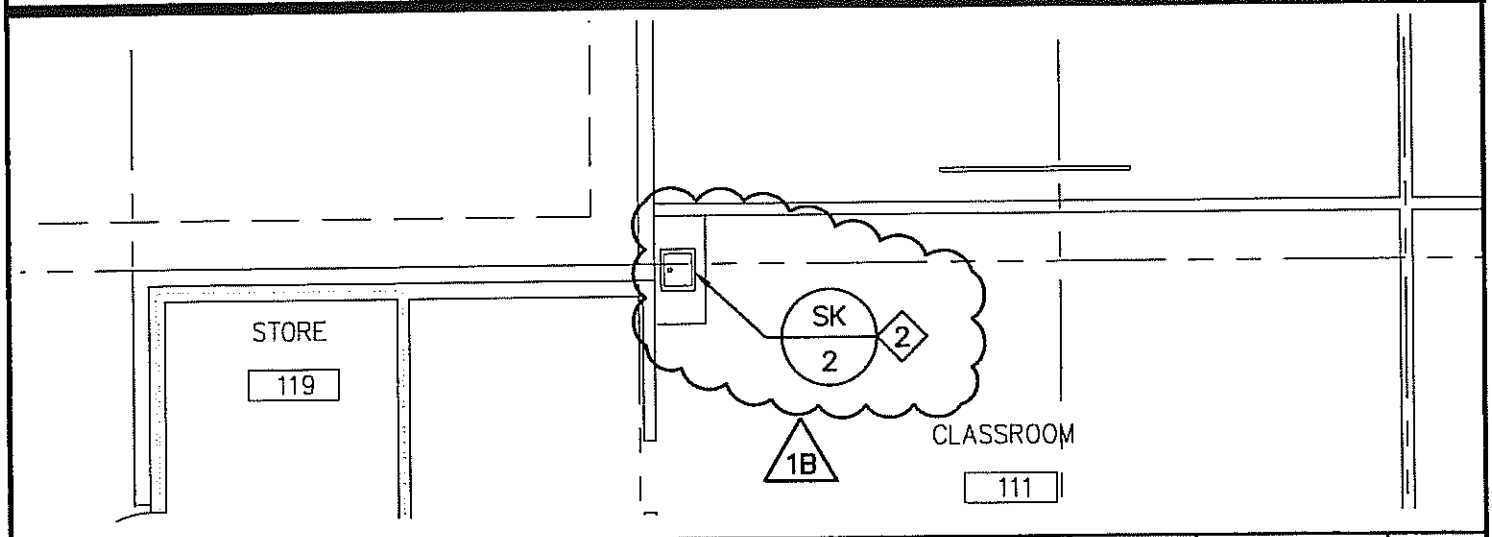

BUILDING 6 - REMODEL PLAN

1/8"=1'-0" | 2

TTG
- STRUCTURAL
- MECHANICAL
- ELECTRICAL
- CIVIL

TMAD TAYLOR & GAINES
901 Via Piemonte, Suite 400
Ontario, California 91764
Phone: 909.477.6915 Fax: 909.477.6916
www.ttgcorp.com

Project No. 2008.125.00

REGISTERED PROFESSIONAL ENGINEER
CHRIS E. RADTKE
No.M24519
Exp. 09/30/12
MECHANICAL
STATE OF CALIFORNIA

DIVISION OF THE STATE ARCHITECT
APPL # 04-110031
FILE #
AC FLS
SSS DATE
IDENTIFICATION STAMP

gkkworks
2355 Main Street | Suite 220
IRVINE | CA 92614
949 250 1500 | 949 955 2706 fax

LICENSED ARCHITECT
GUILLERMO AGUILAR
NO. C13165
REN.: MAY. 2013
STATE OF CALIFORNIA

Prepared By	Scale	Issue Date	Project Number
JHC	N.T.S.	01-20-12	10021-010

Project Title
DSA APPLICATION NO: 04-110031
MUIR FUNDAMENTAL SCHOOL MODERNIZATION

SANTA ANA UNIFIED SCHOOL DISTRICT

Drawing Name
BUILDING 6 - DEMOLITION AND REMODEL PLAN

Reference P2.6

Sheet Number
PSK-1.1

DIVISION 28 – ELECTRONIC SAFETY & SECURITY

SECTION 281600 - INTRUSION DETECTION SYSTEMS

PART 1 – GENERAL

1.01 SCOPE

A. The Contractor shall furnish and install a complete 12VDC intrusion detection system and integrate the new system into the existing District Wide Intrusion Detection Network. The Intrusion Detection system shall be microprocessor-based, network capable and complete with an integral DACT and a Network Interface Card. The intrusion detection system shall be capable of providing, at a minimum, the following:

1. Intrusion Detection Control Panel

a) Integral Digital Alarm Communications Transmitter (DACT).
b) Network Interface capability via the District Wide Area Network.

2. Addressable initiation devices
3. Addressable control modules
4. Notification Appliances
5. Remote Power Supplies
6. On-site or remote video monitoring
7. Temperature threshold detection and monitoring
8. Humidity threshold detection and monitoring
9. Pressure threshold detection and monitoring
10. Power loss detection and monitoring, generator switching
11. Leak detection and monitoring
12. Carbon monoxide detection and monitoring
13. Tank level threshold detection and monitoring
14. Integral Card Access Control System

B. The Contractor shall furnish all labor, materials, appliances, tools, equipment, facilities transportation and services necessary for and incidental to performing all operations in connection with furnishing, delivery and installation of the work of this Section, complete as shown on the applicable Contract Drawings and/or specified herein.

1. This specification document provides the requirements for the installation, programming, and configuration of a complete Command Processor Panel. This system shall include, but not be limited to:

a) Control panel
b) System cabinet
c) Power supply
d) Single and multi-zone expansion modules
e) Addressable initiating bus (LX Bus)
f) Keypad Bus
g) Hard-wired zone cabling
h) Batteries
i) Conduit

1) All required conduit and/or raceway shall be provided by the electrical contractor

j) Associated peripheral devices
k) Other relevant components and accessories required to furnish and install a complete and operational system.

C. Any material and/or equipment necessary for the proper operation of the system, which is not specified or described herein, shall be deemed part of this Specification.

D. The Addressable Intrusion Detection System specified herein shall be connected to the existing District Wide Intrusion Detection Network and Security Management Software.

1. The installing contractor shall be the Factory Authorized Distributor of both the Intrusion Detection System and the Security Management Software. Submittals provided by any contractor who is not so qualified shall be rejected.

2. Contractor shall coordinate with the District or its representative to obtain one Category 5 or 6 data jack and one telephone line for monitoring and system management.

1.02 QUALIFICATIONS

A. Equipment

1. **This specification is based on the equipment of the manufacturer whose equipment is compatible with the existing District Wide Intrusion Detection Network and Security Management Software. Due to this fact, the herein named manufacturer's equipment shall be considered the District Standard for Intrusion Detection. No substitutions shall be accepted.**

2. **The District Standard for Intrusion Detection Equipment for Santa Ana Unified School District is Digital Monitoring Products (DMP).**

a. Contact David Sharp, Southwest Regional Sales Manager at (800) 641-4282.

3. All equipment shall conform to applicable codes and ordinances.

4. All equipment shall bear the label of a Nationally Recognized Testing Laboratory (NRTL) such as Intertek Testing Services NA, Inc. (ITSNA - formerly ETL) or Underwriters Laboratories Inc. (UL) and be listed by their re-examination service.

B. System Supplier/Installer

1. The system shall be provided and installed by the Manufacturer's Authorized Distributor who is trained and certified by the Manufacturer in the proper installation, programming, service and maintenance of the system.

a) Upon demand, the bidding Prime Contractor shall provide the following qualification documentation for the System Supplier/Installer whether it be himself or his subcontractor regardless of tier. Failure to provide the documentation listed below upon demand by the District or its representative shall be cause for disqualification of the Prime Contractor's entire bid.

1) The System Supplier/Installer shall provide proof of current status as the Manufacturer's Authorized Distributor in good standing.
2) The System Supplier/Installer shall provide proof that a minimum of four (4) technicians have attended and completed all requirements and received certification from the manufacturer's installation and service school.
3) The System Supplier/Installer shall provide proof that his company has been continuously engaged in the business of providing alarm systems on school projects in the Orange County area for a minimum of fifteen (15) years.
4) System Supplier/Installer shall provide a list of five (5) immediately verifiable Orange County School District references complete with names and telephone numbers.

5) System Supplier/Installer shall provide a list of twenty (20) on-going or completed projects of type indicated in the contract documents. Five of these shall be projects of similar size and scope to the project indicated in the bid documents and all must be immediately verifiable. For the purposes of this qualification, projects completed more than five years past shall not be acceptable.
6) The System Supplier/Installer shall hold a valid State of California Contractor's License, C-10.
7) The System Supplier/Installer shall hold a valid State of California Alarm Company Operator License, ACO.
8) The System Supplier/Installer shall provide proof that they maintain a complete service and maintenance center within 15 miles of the project address. A complete service center shall include replacement parts in stock in the quantities deemed sufficient by SAUSD or its representatives.

2. The System Supplier/Installer shall be prepared to offer a service contract for the maintenance of the system beyond the warranty period.

1.03 RELATED SPECIFICATIONS

A. The conditions of the General Contract (General, Supplementary, and other Conditions) and the Division 1 - General Requirements specifications are hereby made a part of this Section.

1. All pertinent sections of Division 28, "Electronic Safety & Security"

B. RELATED WORK BY OTHERS

1. Reference Part 3, sub-section 3.01 of this specification.

1.04 APPLICABLE CODES & STANDARDS

A. 2007 Building Standards Administrative Code, Part 1, Title 24, California Code of Regulations
B. 2007 California Building Code (CBC) Part 2, Title 24, California Code of Regulations (2006 International Building Code, Volumes 1 - 2 & 2007 California Amendments)
C. 2007 California Electrical Code (CEC) Part 3, Title 24, California Code of Regulations (2005 National Electrical Code with 2007 California Amendments)
D. 2007 California Fire Code (CFC) Part 9, Title 24, California Code of Regulations (2006 International Fire Code with 2007 California Amendments)
E. NFPA Standards

1. The intrusion detection system shall comply with the applicable provisions of the following current National Fire Protection Association (NFPA) standards:

a) NFPA 70, National Electric Code
b) NFPA 110, Standard for Emergency and Standby Power Systems
c) NFPA 111, Standard on Stored Electrical Energy Emergency and Standby Power Systems
d) NFPA 780, Standard for the Installation of Lightning Protection Systems

F. ADA - Americans with Disabilities Act
G. CAC – California Administrative Code, Title 24
H. U.L. Standards: The system shall comply with the applicable provisions of the following U.L. Standards:

1. UL 294, Standard for Access Control Systems Units
2. UL 609, Standard for Local Burglar Alarm Units and Systems
3. UL 634, Standard for Connectors and Switches for Use with Burglar-Alarm Systems
4. UL 636, Standard for Holdup Alarm Units and Systems
5. UL 639 Standard for Safety for Intrusion-Detection Units
6. UL 681, Standard for the Installation and Classification of Burglar and Holdup Alarm systems

7. UL 1076, Standard for Proprietary Burglar Alarm Units and Systems
8. UL 1610, Standard for Central Station Burglar Alarm Units
9. UL 1635, Standard for Digital Alarm Communicator System Units
10. UL 2044, Standard for Commercial Closed Circuit Television Equipment

1.05 SUBSTITUTIONS: No substitutions shall be accepted.

1.06 SUBMITTALS

A. Within thirty-five (35) calendar days after the date of the award of the contract, the Contractor shall submit to the Architect for review, eight (8) copies of a complete Submittal Package. The Submittal Package shall consist of the following sections, with each section separated with index tabs.

1. Title Page

a) Project Title
b) Project address
c) Architect's name and address
d) Contractor's name and address.

2. Index of Submittal Contents: Each Section of the Submittal Package shall be numbered chronologically and shall be summarized in the Index.

3. Certifications

a) Index of Certification Section Contents
b) Valid State of California Contractors License
c) Manufacturer's Certifications

1) Authorized Distributor
2) Factory Trained Technician

4. Project List

a) A substantial list (minimum of 20) of completed projects equal in scope to that specified herein.

1) Contact information shall be made available upon request.

5. Product Data

a) Index of Equipment Data Sheets
b) Manufacturer's Data Sheets including cable types
c) Applicable Listings and Approvals

PART 2 – PRODUCTS

2.01 SYSTEM REQUIREMENTS

A. Component Enclosure: Housings; power supply enclosures, terminal cabinets, control units, and other component housings, collectively referred to as enclosures shall be so formed and assembled as to be sturdy and rigid. If sheet steel is used in the fabrication of enclosures, it shall be not less than an 18 gauge door with a 20 gauge box frame. Where exposed pins, the hinges shall be of the tight pin type or the ends of hinge pins shall be tack welded to prevent ready removal. Doors having a latch edge length of less than 24 inches shall be provided with a single lock. Where the hinged door latch edge is 24 inches or more in length, doors shall be provided with three-point latching device with lock; or alternatively

with two locks, one located near each end. For SCIF and High Security applications an attack proof enclosure with proper tampers UL listed for use with the XR500/XR500N/XR500E shall be used.

B. Electronic Components

1. All system electronic components shall be solid-state type, mounted on printed circuit boards. Light duty relays and similar switching devices shall be solid-state type or electromechanical.
2. The panel shall have an over-current notification LED that lights when devices connected to the Keypad Bus and LX-Bus(es) draw more current than for which the panel is rated. When the over-current LED lights, the LX-Bus (es) and Keypad bus are shut down.

C. Control Unit

1. The networked control panel shall provide the following capabilities:

   a. Expansion to a total of at least 10,000 user codes with 99 user profile definitions.
   b. Sixteen (16) independent door/keypad addresses, each with four zones.
   c. Twenty (20) Holiday Dates for custom holiday scheduling by area.
   d. A total door access granted event buffer of at least 10,000 events.
   e. Anti-passback access control selectable by area and user.
   f. Four (4) shift schedules per area.
   g. A total of at least 100 programmable output relay schedules.
   h. Thirty-two (32) individual reporting areas.
   i. Built-in bell and telephone line supervision.
   j. Require two-man access code or credentials.
   k. Support programming to require the same or different access code entered within a programmed delay time of 1 to 15 minutes after disarming before activating a silent ambush alarm.
   l. Support area programming that disables schedule and time-of-day changes while system is armed so that area can only be disarmed during scheduled times.

2. Control unit shall be capable of operating and supervising notification appliance devices as well as addressable initiating detection devices and an integrated supervised dual line digital communicator.
3. Control unit must be "Flash ROM" updatable, and program must be held in non-volatile RAM. The panel shall be able to function while the update is in process.
4. Control unit shall be capable of sending information to and receiving instructions from the existing District Wide Security Management Software via the District's Wide Area Network (WAN).
5. Control unit shall be capable of operating using an optional built in Encrypted Alarm Router for SCIF (Sensitive Compartmented Information Facility) applications that is certified by NIST (National Institute of Standards and Technology) for 128 Bit AES Rijndael Encryption communications.
6. The optional built-in Encrypted Alarm Router shall be capable of compliance with DCID 6/9 and UL 2050 standards.

D. Control Designations: Controls shall be provided to ensure ease of operation of all specified characteristics. Where applicable, clockwise rotation of controls shall result in an increasing function. Controls, switches, visual signals and indicating devices, input and output connectors, terminals and test points shall be clearly marked or labeled on the hardware to permit quick identification of intended use and location.

E. Test Modes

1. The system shall include a provision that permits testing from any alphanumeric keypad. The test shall include standby battery, alarm bell or siren, and communication to the District Police Station.
2. The system shall include a provision for an automatic, daily, weekly, thirty (30) day, or up to sixty (60) day communication link test from the control panel installation site to the central station.

3. The system shall include a provision for displaying the internal system power and wiring conditions. Internal monitors shall include the bell circuit, AC power, battery voltage level, charging voltage, panel box tamper, phone trouble line 1, phone trouble line 2, transmit trouble, and network trouble.

F. Serial Interface: The control panel shall be capable of a serial interface to output information to a standard serial printer or serial interface to a communication port on a standard computer. Through control panel programming the system shall include a provision to allow the selection of which reports are to be output.

G. Power Supplies

1. Power supplies for the control unit shall operate from 120 VAC, supplied at the respective protected areas. Standby batteries shall be supplied to power the system in the event of a utility power failure. Batteries shall be sized to provide 105% capacity for eight hours. Standby batteries shall be sealed lead-acid. Power supplies shall be all Solid State.
2. Controls shall be designed to maintain full battery charge when alternating current is available. Batteries shall be recharged to 85% capacity within 24 hours from battery use. The system shall be automatically transferred to battery power upon loss of alternating current power and return to alternating current power upon restoration. Intrusion alarms shall not be initiated during switch over; a signal shall be initiated upon failure of battery or alternating current power.
3. Approved power supplies shall meet or exceed the following power supply model specifications:

   a. UL Listed DMP 505-12: 12VDC 5 amp with transformer and enclosure.
   b. UL Listed DMP 504-24: 24 VDC 4 amps with transformer and enclosure.

H. Software

1. The system shall have the capability to interface with computer software with the capability to fully program the panel by connecting to the panel through:

   a. Direct cable connection interface card
   b. Receiver phone line connection
   c. Standard phone line connection
   d. Ethernet network connection
   e. Network connection across the Internet

2. The system shall interface with the existing District Wide Security Management Software via the District Wide Area Network (WAN).

3. The system shall interface with computer software capable of exporting reports in the following file formats:

   a. Excel spreadsheet (*.xls)
   b. Rich Text (*.rtf)
   c. Windows Metafile (*.wmf)
   d. QuickReport (*.qrp)
   e. Text (*.txt)
   f. Comma-separated (*.csv)
   g. HTML document (*.htm)

4. The system shall interface with computer software capable of printing custom, filtered reports including:

   a. All Events
   b. Zone Action
   c. Arming/Disarming
   d. Area Late to Close

e. User Code Changes
f. Door Access Granted
g. Door Access Denied
h. Opening/Closing Schedule Changes
i. System Monitors
j. System Events

I. INTEGRATED INTRUSION ALARM AND ACCESS CONTROL OPERATION

1. Access Authority Levels: The system shall be capable of programming access credentials authority levels to check whether the user has access to a specific area and also has the authority to disarm or arm the area. If the user access credential has access and disarm/arm authority the system shall provide the user the option to disarm the area simultaneously upon opening the door, or to open the door and begin an entry delay timer. With the timer option the user then disarms the area using an intrusion control keypad inside the area. If the user only has access authority to the area and the area is in an armed condition, the user is denied access to the area.

2. Door Open Schedule Override: The system shall be capable of programming certain area doors to be scheduled to unlock and lock at specific times of the day or night. The lock/unlock function shall be capable of an override option depending upon the area armed/disarmed status. If the area remains in an armed status at the scheduled unlock time the armed status overrides the unlock schedule ensuring the doors remain locked and armed in situations where the business might open late, close early, is affected by inclement weather, or another emergency.

3. Common Area: The system shall be capable of programming a common area to be armed when the last area in the system is armed and disarmed when the first area in the system is disarmed. To ensure the common area works properly it shall not have any user codes assigned to the common area. The system shall also be capable of programming multiple common areas.

4. Early Morning Ambush

   a. The system shall be capable of programming an area to require two user codes be entered within a programmed number of minutes to prevent an ambush message from being sent to the Central Station Receiver. If both user codes are not entered within the time an ambush message is sent to the central station receiver.
   b. Both user codes shall have the authority to disarm the specific area and must be entered at the same keypad or reader. The keypad shall not display any indication that the ambush timer is running.
   c. The system shall be capable of programming an output to provide an external indicator that an ambush situation is taking place.

5. Two-Man Rule: The system shall be capable of programming an area to require two separate user codes be entered in order to disarm and/or allow access to a specific area. Both required codes shall have at least the same or greater authority level. Both required codes shall be entered within 30 seconds or an alarm shall activate.

6. UL Bank Safe & Vault Operation: The system shall be capable of being programmed to only be disarmed during scheduled times regardless of the authority level of any user code or user profile in the system. The schedule and time and date set for this area shall not be capable of being changed while the area is armed. Zones assigned to Bank Safe & Vault areas shall not be able to be bypassed or force armed.

7. Panic Button Summary Test

   a. The system shall have the ability to test panic buttons without sending a panic alarm to the Central Station Receiver.

b. The system shall also have the ability to send panic zone test verification and failure results to the Central Station Receiver.
c. During the test, each time a panic zone trips, the display number shall increment and the keypad buzzer sound for two seconds.
d. The number of panic zones tripped shall constantly display until the test ends or no panic zone activity has occurred for 20 minutes.
e. When the Panic Zone Test ends and a zone failed (did not trip) during the test, the keypad shall be able to display the zone name and number and have the buzzer sounds for one second. Additional zone failed zones shall display when a button is pressed.

J. FALSE ALARM REDUCTION FEATURES

1. The system shall be capable of providing false alarm reduction features, functions, capabilities, or processes that either require alarms be verified or potential alarms be corrected before a system or zone can be placed into an armed state.

2. Exit Error Alert and Reporting: The panel shall be able to provide an automatic function to prevent a false alarm from occurring if an exit door does not properly close after the system is armed.

3. Entry and Exit Delay Annunciation

   a. When arming, the system shall provide clear annunciation indicators to the user about the need to exit the premises prior to the exit delay time expiring.
   b. When disarming, the system shall notify the user the need to disarm the system prior to the entry delay time expiring.

4. Remote Annunciation: The system shall be able to provide entry and exit delay time period notification. This notification can be from DMP keypads, remote annunciators, or bell tests.

5. Abort Reporting: The system shall be capable of sending an Abort report to the central station if the system is disarmed while the alarm is still sounding. The Abort report shall be sent *after* the alarm report to notify the central station that an authorized user has cancelled the alarm.

6. System Testing: The system shall offer testing features that are simple, quick, and complete and provide the highest measure of safety by ensuring that alarm conditions are detected and communicated to the proper authorities in a timely manner and on a regularly scheduled basis.

7. Ambush Code: The system shall offer ambush codes for those dangerous encounters where the user is instructed to either arm or disarm the system under threat of harm. The duress code shall disarm the system without giving local indication of an alarm that might put the user well-being in jeopardy.

8. Two-Button Panic Feature: The system shall support DMP keypads that provide the option to use only two-button panic codes. The user shall be required to press and hold two designated keys for approximately two seconds before the system generates a panic alarm.

9. Fire Verify Zones: The system shall support Fire Verify zones to help the panel verify the existence of an actual fire condition before it sends an alarm report to the central station. The Fire Verify zone shall require the panel to perform a Sensor Reset whenever a device connected to a Fire Verify zone initiates an alarm. This shall begin a verification period during which the panel waits for a second alarm initiation. If the original zone or any other Fire Verify zone on the panel initiates an alarm within the next 120 seconds, the panel shall recognize this as an actual alarm and send an alarm report to the central station.

10. Cross-Zoning Protection: The system shall support cross-zoning as a means of requiring two device trips to occur within a short period of time before sounding an alarm and sending an alarm

report to the central station. Supported device trips shall be from one device that trips two times, or from two devices that each trip once.

11. Swinger Zone Bypassing: The system shall be capable of automatically bypassing a zone if it goes into an alarm or trouble condition a specified number of times within a one-hour period. The panel shall be able to track the number of times the zone trips while armed and compare that against a programmed number. When that number is reached, the panel shall be able to automatically bypass the zone. The panel shall be capable of resetting the zone when the area to which it is assigned disarms, is manually reset from the keypad or remotely, or remains normal for one hour.

12. Recently Armed Report: The system shall be capable sending a System Recently Armed report, along with a zone alarm report, to the central station any time an alarm occurs within five minutes of the system arming. The System Recently Armed report allows the central station operator to follow a "call the subscriber first" procedure instead of immediately dispatching the police to what could be a false alarm.

13. Transmit Delay: The system shall be capable of programming the panel to wait up to 60 seconds before sending burglary alarm reports to the central station. If an alarm is accidental, the user shall be able to disarm the system within the programmed Transmit Delay time. An Abort report shall be sent in place of an alarm report after the system disarms. During the alarm, sirens and panel relay outputs shall not be delayed and shall still provide local condition annunciation.

14. Call Waiting Cancel: The system shall be capable of being programmed to cancel call waiting any time the panel dials the receiver number to send a report.

2.02 SYSTEM CAPABILITIES

A. System Description

1. The system user shall be capable of selectively arming and disarming any one or more of 32 areas within the intrusion detection system based on the user PIN code and/or keypad used. Each of the 574 zones shall be able to be assigned to any of the 32 available areas. The system shall be capable of having up to a sixteen (16) character length name programmed for each area.

2. The system user shall be capable of assigning an opening and closing schedule to all areas or to each of the 32 areas separately. Each area shall be able to arm or disarm automatically by a schedule. The system shall have the capacity for common areas that automatically disarm when any other area disarms and that automatically arm when all others areas arm.

3. The networked system shall have the ability to comply with Bank Safe & Vault application. The networked system shall also have the ability to use a two-man rule for disarming or allowing door access to an area. The system shall have the ability to operate a Common Area application.

4. The system shall have a minimum of eight (8) grounded burglary zones available from the control panel.

5. The system areas and zones shall be programmable, and the system shall store, log, display, and transmit specific custom designations for system areas, zones, and user names.

6. To ensure continued, one-call support, the system shall be constructed of sensing components provided directly by the system manufacturer, such as power supplies, motion detectors, door and window position switches, glass break detectors, or other sensing devices that the manufacturer offers.

7. The system controller, user interfaces, zone input devices, relay output devices, and the system signal receiving equipment shall be engineered, manufactured, assembled, and must be distributed from a location within the United States of America.

8. The system shall support user interaction by way of a keypad, web browser, system software, key switch, or radio frequency wireless control, using integrated or auxiliary devices provided by the system manufacturer.

9. The system shall support controller zone input connections, system keypads, system zone expansion modules, and wireless zone input modules, and must support zone input connections by way of at least two competitive products. The system shall offer a seamless integrated compatibility with hard-wire and/ or wireless zone expansion equipment for at least 200 wireless zones and/ or a maximum of 574 hardwired zones.

10. The system shall be capable of offering at least five zone expansion buses, each of which can support the connection of up to 15,000 feet of four-wire cable. Zone expansion and keypad data buses that exceed 2,500 feet of cable must include splitter/repeater modules to boost data voltage and maintain data integrity.

11. The system shall provide a seamless capability to provide a minimum of 500 addressable relays, which can be located at any connection location upon a zone expansion bus.

12. System relay outputs shall have the capability of being triggered as a result of a command from the user interface, changes in system status, changes in zone status, or by a programmable schedule.

13. System relay output states shall be programmable for momentary, maintained, pulsed, or must follow the state of an associated system zone input.

14. The system shall be completely programmable either locally from a keypad or remotely through a standard dial-up, and network connections by way of a LAN, WAN, and/or by way of the Internet.

15. The control unit shall be completely programmable remotely using remote annunciators, and/ or using upload/ download software that communicates using SDLC 300 baud, 2400 baud, or IP Addressed data network. On-site programming from a personal computer shall also be permitted.

16. The control unit shall be equipped with an anti-reversing circuit breaker to prevent damage due to accidental reversal of battery leads.

B. Input/Output Capacity

1. This system shall be capable of monitoring a maximum of 574 individual zones and controlling a maximum of 502 output relays.

2. The control panel shall have, as an integral part of the assembly, 2 SPDT Form C relays rated at 1 Amp at 30 VDC and four open collector 12 VDC outputs rated at 50mA each. It shall also have the capacity of a maximum of 125 output expander modules with 500 switched ground, open collector outputs, 50mA maximum and 502 auxiliary relays (Form C rated at 1.0 Amp at 30 VDC).

3. The panel shall also provide 100 programmable output schedules, and include an integral bell alarm circuit providing at least 1.5 Amps of steady, pulsed, or temporal bell output. Output type shall be programmable by zone type. Relays and voltage outputs shall be capable of being independently programmed to turn on and/or off at selected times each day.

C. User/Authorization Level Capacity: The system shall be capable of operation by 10,000 unique Personal Identification Number (PIN) codes with each code having one (1) of ninety-nine (99) custom user profiles. This allows for limitation of certain functions to authorized users. The operation of all keypads shall be limited to authorized users.

D. Keypads

1. The system shall support a maximum of sixteen (16) keypads with alphanumeric display. Each keypad shall be capable of arming and disarming any system area based on a pass code or Proximity key authorization. The keypad alphanumeric display shall provide complete prompt messages during all stages of operation and system programming and display all relevant operating and test data.

2. Communication between the control panel and all keypads and zone expanders shall be multiplexed over a non-shielded multi-conductor cable, as recommended by the manufacturer. This cable shall also provide the power to all keypads, zone expanders, output expanders, and other power consuming detection devices.

3. If at any time a keypad does not detect polling, the alphanumeric display shall indicate "SYSTEM TROUBLE". If at any time two devices are programmed for the same address, the alphanumeric keypad shall display "4 WIRE BUS TROUBLE". If at any time a keypad detects polling but not for its particular address, the alphanumeric display shall indicate "NON POLLED ADDR". The system shall display all system troubles at selected keypads with distinct alphanumeric messages.

4. The keypad shall include self-test diagnostics enabling the installer to test all keypad functions: display test, key test, zone test, LED test, relay test, tone test, and address test.

5. The keypad shall provide an easy-to-read English text display. The text shall exactly match the text seen in all software reports, keypad displays, and central station reports.

6. The keypad user interface shall be a simple-to-use, menu-driven help system that is completely user friendly.

7. The control panel shall support a keypad interface accessible on the World Wide Web in a browser window. The web-accessible keypad interface shall provide at least five (5) programmable hyperlinks for camera access or other use.

8. The system shall support sub-control keypads with four (4) built-in zones and capable of functioning in the following modes:

   a. Panel monitors all four (4) keypad zones independently with a maximum of 125 keypads attached to the control panel.
   b. Panel assigns one (1) zone to each keypad and monitors all keypad zones as a single zone with a maximum of 500 keypads attached to the control panel.
   c. Stand-alone mode allowing keypad to operate as a self-contained security system independent of the control panel

E. Zone Configuration

1. A minimum of 4 Class B ungrounded zones shall be available at each keypad or zone expander on the system. The system shall have the capacity for a maximum of sixteen (16) keypads and a maximum of 125 four (4) zone expanders or 500 single zone expanders. It shall also have the capacity of a maximum of 125 supervised relay output expanders.

2. Each zone shall function in any of the following configurations: Night, Day, Exit, Fire, Supervisory, Emergency, Panic, Auxiliary 1, Auxiliary 2, Fire Verification, Cross Zone, Priority, and Key Switch Arming.

3. The LX bus and the keypad bus shall be able to operate at a maximum wiring distance of 2500 feet from the control panel on unshielded, non-twisted cable. This distance may be extended to a total of 15,000 feet when bus splitter/repeater modules are installed.

4. The system shall have the capability to incorporate up to 500 addressable zone expander points.

5. Each zone shall function in any of the following configurations:

   a. Night
   b. Day
   c. Exit
   d. Fire
   e. Supervisory
   f. Emergency
   g. Panic
   h. Auxiliary 1
   i. Auxiliary 2
   j. Fire Verification
   k. Cross-Zone
   l. Priority
   m. Arming

F. Communication

1. The system shall be capable of signaling to two remote monitoring station receivers, four telephone numbers of 32 digits each using two separate switched telephone network lines such that if two unsuccessful attempts are made on the first line to the first number, the system shall make two attempts on first line to the second number. If these two attempts are unsuccessful, the system shall make two further attempts on the first line of the first number. After the tenth unsuccessful attempt, dialing shall stop and the alphanumeric keypad shall display trouble. Should another event occur that requires a report to be transmitted, the dialing process shall be repeated. The system shall have a programmable option to dial a second set of telephone numbers after the first ten attempts using the same sequence.

2. The system shall be capable of communication using the IBM Synchronous Data Link Control format, and at least two other standard industry formats.

3. The system shall be capable of supporting Network communication with digital dialer backup, existing Ethernet or token ring data networks, satellite communication, fiber optic networks, local area networks, wide area networks, cellular communication, and retail data networks.

G. Network Communication

1. The control panel shall be capable of asynchronous network communication with a retry time between 3 and 15 seconds for a total of one (1) minute. If communication is unsuccessful the control panel shall be capable of attempting backup communication through any of the available communication methods to the same receiver or a backup receiver.

2. Network communication between the control panel and the receiver shall be in a proprietary communication format.

3. The control panel shall be capable of supporting Dynamic Host Communication Protocol (DHCP) Internet Protocol (IP) addressing.

4. Underwriters Laboratories (UL) shall list network communication by the control panel for Grade AA High-Line Security.

5. The control panel shall be capable of two-way network communication using standard Ethernet 10BaseT in a LAN, WAN, or Internet configuration.

6. The control panel shall be capable of communication by means of a 128 Bit AES Rijndael Encryption process certified by NIST (National Institute of Standards and Technology) to an SCS-1R receiver with a built-in Encryption Alarm Router.

7. The control panel shall be capable of meeting DCID 6/9 and UL 2050 standards.

H. TCP/IP Network Trapping

1. The control panel shall be capable of having communication set to Network operation. When a trap is set in Remote Link, the software shall be capable of sending a panel trap message with the panel account number to the iCOM or iCOM-E installed in an SCS-1R receiver.

2. The receiver iCOM or iCOM-E shall store the trap and monitor the panel for the next message. When the panel sends its next message, the receiver iCOM or iCOM-E shall then send a message to the panel to contact Remote Link at the IP address contained in the original trap message.

3. The trap message shall be stored in the receiver iCOM or iCOM-E for up to four hours. If the trap message is not sent to the panel within the four-hour window, the panel trap message shall be discarded and a new trap message must be sent from Remote Link.

4. The user shall be able to view the trap status in the receiver iCOM or iCOM-E in Remote Link using the Trap Query function.

I. NAC Circuit Configuration

1. The system shall be capable of additional Class B NAC circuits utilizing the Model 867 Notification Module. Each module shall be controlled and supervised via the SLC loop and monitor for short circuits, open circuits, and ground faults. The NAC circuits shall monitor for external NAC trouble conditions.
2.
3. The system shall be capable of providing Class A NAC circuits utilizing the Model 865 Notification Module. Each module shall monitor for short circuits, open circuits, and ground faults. The NAC circuits shall monitor for external NAC trouble conditions and have a manual bell silence switch.

2.03 SYSTEM COMPONENTS

A. Head End Equipment

1. Intrusion Alarm Control Panel: **DMP - Model No. XR500N-G**

   a. Complete with large enclosure
   b. Complete with Dialer
   c. Quantity of (1) one required.

2. Zone Expansion Interface Card: **DMP - Model No. 481,** Quantity of (1) one required.

2. Expansion Bus Adaptor: **DMP - Model No. 461,** Quantity of (1) per 100 points, Maximum of (5) five per Control Panel, Provide a minimum of (2) for this project

B. LCD Keypad: DMP – Thinline Series Model No. 7060-W

1. 32-character alphanumeric LCD display with blue backlit keyboard, self-diagnostic, three 2-button panics, supervised or unsupervised operation, alert sounder, armed and AC LED.

2. The intrusion alarm system shall be designed to include a predetermined time delay between entry and alarm. Operation of the keypad shall abort the alarm condition and disable the system until re-armed.

3. During an alarm condition, the alphanumeric readout on the keypad shall indicate, by room name and number, the location of the alarm and the keyboard turns red.

4. Quantity as indicated on plans

C. Remote Power Supplies: Altronix – Model No. SMP3 – Power supply for passive infrared detectors, 12VDC provide one in each building. Provide power supply, terminal cabinet, transformer and battery as required for a complete and operable system.

1. Terminal cabinet enclosure: Mier Products, Inc. – Model No. MIPW108 or equal

2. Transformer 120VAC-12VDC: **DMP - Model No. 321**

3. Battery: Yuasa – Model No. NP7-12 or equal

D. Data Bus Splitter/Repeater: **DMP – Model No. 710.** Expands the typical LX-Bus installation number of devices and the length of the wire. Quantity as required.

E. Single Point Zone Expander: DMP - Model No. 711 – Single Point Zone Expander. The single point zone expander module provides a single addressable point and serves as the interface between the 4-wire LX Bus from the control panel and the conventional initiation devices (i.e. motion sensors and door switches). Maximum of 574 addressable zones are available on the XR500N-G type control panel.

F. Multi-Point Zone Expander:

1. DMP – Model No. 714-8 - Eight-point Zone Expander. The eight-point zone expander module provides eight addressable points and serves as the interface between the 4-wire LX Bus from the control panel and the conventional initiation devices (i.e. motion sensors and door switches). Maximum of 574 addressable zones are available on the XR500N-G type control panel.

2. **DMP – Model No. 714-16 - Sixteen-point Zone Expander.** The sixteen-point zone expander module provides eight addressable points and serves as the interface between the 4-wire LX Bus from the control panel and the conventional initiation devices (i.e. motion sensors and door switches). Maximum of 574 addressable zones are available on the XR500N-G type control panel.

G. Motion Sensors – Dual Technology

1. **Bosch – Model No. DS9360**

   a. Ceiling mount (PIR) passive infrared/microwave motion sensor
   b. 360 degree X 60' diameter pattern
   c. Locate motion sensors for optimum coverage per manufacturer's recommendation.
   d. Connect to LX Bus via zone expansion module

2. **Bosch – Model No. DS950**

   a. Surface wall mount (PIR) passive infrared/microwave motion sensor
   b. 50' x 50' range
   c. Locate motion sensors for optimum coverage per manufacturer's recommendation.
   d. Connect to LX Bus via zone expansion module

H. Magnetic Door Switch: **Sentrol – Model No. 1078W.** Door magnetic switches shall be mounted flush in door jam at locations as indicated on plans. Locate switches only at nearest door to keypad locations. Program delay as required. Connect to LX Bus via zone expansion module

I. Armored Door Switch: Sentrol – Model No. 2505A. Surface mount switch shall be utilized for surface mount door applications and roof hatches. Locate switches only at nearest door to keypad locations and roof hatches. Program delay as required. Connect to LX Bus via zone expansion module

J. Siren: ATW Security – Model No. DS-301SET. 25 watt speaker in indoor/outdoor stainless steel enclosure. Sirens shall be provided only if indicated on plans.

K. Wire/Cable

1. Interior Device Cable: Falcon Wire - Model No. 590422R or equal. 22/4-conductor stranded CMR with white jacket
2. Underground LX Bus/Keypad Bus Cable: Falcon Wire - Model No. 400418H20 or equal. 18/4-conductor stranded FPL with black jacket. Water-blocked cable construction

PART 3- EXECUTION

3.01 DIVISION OF WORK

A. While all work included under this specification is the complete responsibility of the contractor, the division of actual work listed following shall occur.

1. All conduits with pull cords, all electrical pull boxes, grounding rods, all outlet boxes, terminal cabinets, backboards, etc., which form part of the rough-in work shall be provided and installed completely by the Division 16 Contractor. Coordinate as necessary for proper installation.

2. The balance of the system, including installation of initiating devices, notification appliances and equipment, making all connections, etc., shall be performed by the Factory Trained Technicians of the System Supplier/Installer.

3. All 120VAC power conductors and conduits associated with power circuits to all low voltage system equipment locations shall be provided and installed by the Division 16 Contractor.

4. System grounding, in compliance with CEC Article 250, by the Division 16 Contractor.

5. Labeling of pullboxes and terminal cabinets shall be provided and installed by the Division 16 Contractor.

3.02 INSTALLATION

A. All work shall be completed in strict accordance with all applicable codes and ordinances, by a qualified Manufacturer's Authorized Distributor.

B. Cable/Wire

1. All cable/wire for the system specified herein shall be new, unless otherwise noted on plans.
2. System cable/wire and equipment installation shall be in accordance with good engineering practices as established by the California Electrical Code (CEC). Wiring shall meet all applicable electrical codes. All cable/wire shall test free from all grounds and shorts.
3. All cable/wire shall be labeled at all points of termination. All labeling shall be based on the room numbers as provided by the District or its representative.
4. Protection and dressing of cables: Cables mounted on backboards and within equipment racks, etc., shall be grouped and securely attached to the backboard or enclosure in horizontal and vertical bundles in a neat workmanlike manner using Thomas & Betts "Ty-Rap", Panduit cable mounts and Allen-Tel cable management or equal. Edge protection material ("cat-track") shall be installed on edges of holes, lips of ducts or any other point where cables or harnesses cross metallic edge.
5. Shielding: Shielded cable shall not be utilized for this system. No exceptions.

6. Underground cables: Any cable/wire pulled through manholes or pullboxes located below grade, shall be continuous with no splices. The cable/wire shall be intact with no cuts in the protective outer jacket. The cable/wire shall be suitable for this application.

C. WIRE TERMINATING: All conductors shall be equipped with spade lugs at terminations in terminals, motion detection units and controllers. All splices shall terminate on terminal blocks and all wire shall be color coded, using colors consistent with use:

1.	Door Switches:	2-White
2.	Fire Sprinkler:	2-Red
3.	Security Switches:	2-Black
4.	Alarm Common:	White
5.	Alarm Signal (Zone):	Brown
6.	Alarm Voltage:	Pink

D. SYSTEM START-UP: All start-up programming and system commissioning shall be performed by a manufacturer's trained and certified technician.

E. SYSTEM VERIFICATION: Subsequent to system start-up the system installer shall perform a pre-test to verify that the following features are functioning properly.

1. All initiation devices
2. All monitor modules
3. Local audible devices
4. Network connection and communication link to monitoring service

F. ACCEPTANCE TESTING: The system installer shall, in the presence of the Inspector of Record (IOR), perform 100% testing as noted in System Verification above.

G. IN SERVICE TRAINING: The Contractor shall instruct personnel designated by the District in the proper use, basic care and maintenance of the system beyond the warranty period. Contractor shall provide up to four hours of in-service training with this system.

H. FACTORY TRAINING & CERTIFICATION

1. The manufacturer shall provide factory certified training to two (2) technicians from the District. These technicians shall be trained and certified as manufacturers certified technicians capable of performing any work on the system after the installation of the system.
2. All cost for training including travel, lodging, meals and per diem shall be included in the System Supplier/Installer's bid for this project.

H. CONTRACT CLOSE-OUT DOCUMENTATION: Contractor shall provide the following:

1. One reproducible hard copy of project record drawings.
2. One copy of manufacturer's maintenance and operation manuals.
3. One copy of system warranty

I. WARRANTY: The Contractor shall warrant the equipment to be new and free from defects in material and workmanship, and will, within one year from the date of installation, repair or replace any equipment found to be defective. This warranty shall not apply to any equipment that has been subject to misuse, abuse, negligence or unauthorized modification.

END OF SECTION

SECTION 27 29 00

WIRELESS CLOCKS

PART 1 – GENERAL

1.01 RELATED DOCUMENTS

A. Drawings and general provisions of Contract, including General and Supplementary Conditions and Division-1 Specifications apply to work of this Section.

1.02 SCOPE OF WORK

A. The work under this section includes all labor, material, equipment, supplies, labor, testing, and accessories required to furnish and install a complete Integrated Communications and Wireless Cock Systems as indicated on the drawings and as specified herein.

B. Provide new Integrated Communications Systems consisting of Intercom as manufactured by Primex wireless GPS clocks as manufactured by Primex. No Substitutions.

C. It is the intent of the Drawings and Specifications for the Contractor to provide and install a complete, fully operational, and tested system.

D. All miscellaneous system components including, but not limited to, cables, termination equipment, punch blocks, patch panels, backboards, dedicated power provisions, as well as any other related items, shall be furnished and installed complete under this section, such that the system shall perform all functions listed herein in compliance with all of the specified requirements.

1.03 GENERAL REQUIREMENTS

A. The contractor shall hold a valid State of California C-7 Low-Voltage and C-10 electrical license, shall have completed at least 20 projects of equal scope, shall have been in business of furnishing and installing systems of this scope and magnitude for at least five years, and capable of being bonded to assure the owner of performance and satisfactory service during the guarantee period.

B. The contractor shall hold all other licenses required by the legally constituted authorities having jurisdiction over the work.

C. All work shall be performed under the supervision of a company accredited by the basic equipment manufacturer and such accreditation must be presented.

D. The installing contractor shall be a factory trained and shall maintain a fully equipped service organization capable of furnishing adequate repair service to the equipment. The installing contractor shall maintain a spare set of all major parts for the system at all times. All system components shall be 100% backed up with stock at contractors shop.

E. All of the equipment in this specification shall be furnished and installed by the Factory trained installer of the equipment.

F. If applicable, all of the equipment in this specification shall be furnished and installed with the most current software package available at the time of installation. At the time of Owner Acceptance of the installation, all equipment shall include any and all updated software revisions. In addition, when the software is available in disk format, a backup copy of the most up to date revision shall be handed to the Owner at the completion of the project.

1.04 QUALITY ASSURANCE

A. In order to maintain a high degree of quality assurance and District Standard, the contractor shall use the parts and supplies as specified in this specification.

1.05 SUBMITTAL AND MANUAL

A. Submittal requirements of this section are:

1. Within thirty-five (35) calendar days after the date of award of the Contract, the Contractor shall submit eight copies of the complete submission to the Architect for review.

2. The submission shall consist of five major sections with each section separated with index tabs. Each page in the submission shall be numbered chronologically and shall be summarized in the index.

3. The first section shall be the "index" which shall include the project title and address, name of the firm submitting the proposal and name of the Architect.

4. The second section shall include a copy of the Contractors valid C-7 California State Contractors license, a list of 20 projects of equal or greater scope, and a list of proposed instrumentation to be used by the contractor. Include Factory training certificate.

5. The third section shall contain the comparative specification listing, including a complete listing of the characteristics of the equipment to be furnished next to all of the specified equipment's features and functions as stated in the specifications and data sheets.

6. The fourth section shall contain an original factory data sheet for every component in the specifications.

7. The fifth section shall contain a designation schedule for each device location and complete 1/8" = 1'-0" scale AutoCAD created drawing showing system wiring plans. The Architect / Engineer will provide AutoCAD format drawings of the original associated plans, upon receipt of a written request from the contractor at no charge.

B. Failure to comply with all of the requirements listed above will result in the rejection of the entire submittal package.

C. The Contractor shall provide two copies of an "Operating and Servicing Manual" for the system. The manuals shall be bound in flexible binders. All data shall be printed material or typewritten. Each manual shall include the following:

1. Instructions necessary for the proper operation and servicing of the system.

2. Complete as-built installation drawings of the system.

3. A schematic diagram of major components and replacement numbers.

1.06 GENERAL SYSTEM PRODUCT, INSTALLATION AND OVERALL SYSTEM WARRANTY

A. Prior to Owner acceptance, the contractor shall provide to Owner, a product and performance warranty.

B. The warranty shall commence from the date of final written acceptance by the Owner.

C. All conditions for obtaining the warranty shall be the sole responsibility of the contractor.

D. The contractor shall maintain a competent service organization and shall, if requested, submit a service maintenance agreement to the owner after the end of the guarantee period.

1.07 SPECIFIC PRODUCT, INSTALLATION AND OVERALL SYSTEM WARRANTY

A. The entire system shall be warranted free of mechanical or electrical defects for a period of one (1) year after final acceptance of the installation. Any material showing mechanical or electrical defects shall be replaced promptly at no expense to the Owner.

SECTION 2 - SYSTEM EQUIPMENT SPECIFICATION

2.01 ACCEPTABLE MANUFACTURERS

A. In order to establish quality and standards of performance of equipment and match the District's Standard, the specified equipment for the clock system is that Primex Wireless. All mechanical, electrical and general information set forth on the respective data sheets for each specified item shall be considered as part of these specifications and binding herein.

B. Its is the responsibility of the bidder to insure that the proposed product meets or exceeds every standard set forth in these specifications and the equipment's technical data sheets.

C. The functions and features specified are vital to the operation of this facility. Therefore, inclusion of a component's manufacturer in the list of acceptable manufacturers does not release the contractor from strict compliance with the requirements of this specification.

D. All basic electronic equipment (not including cable and speakers) specified herein shall be produced by a single manufacturer of established reputation and experience who shall have produced similar apparatus for at least three or more years and who shall be able to refer to similar installations rendering satisfactory service.

2.02 EQUIPMENT

A. WIRELESS CLOCK

1. GPS Receiver and Transmitter Part Number 14143

2. Repeaters as needed part number 14144

3. Analog Wireless Clocks part number 14155
   a. 12" Black Polycarbinate

2.03 COMPONENTS AND DESCRIPTIONS

A. Wireless Clock System

1. GPS Receiver

   a. Antenna designed for outdoor use
   b. Cable. 10', 100', or 200' lengths
   c. Mounting bracket for attachment to roof structure

2. Transmitter

   a. Transmission:

      Frequency Range: 72.100 to 72.400 MHz.
      Transmission Power: 1 watt (30dBm) maximum
      Radio technology: narrowband FM
      Number of channels: 16
      Channel bandwidth: 20 kHz maximum
      Transition mode: one-way communication
      Data rate: 2 KBps
      Operating range: 32 degree F to 158 degrees F (0 degrees C. to 70 degrees C).

   b. Transmitter specifications:

      Transmitter output power: +26 to +30 dBm
      Frequency deviation: +/- 4 kHz
      Transmitter power requirements: 120 VAC 60 Hz
      Internal power requirements: 5 VDC
      Carrier frequency stability: +/- 20 ppm
      Transmitter shall have 16 selectable channels to assure interference-free reception.
      Transmitter shall have the following switches:
         Time zone adjustment switches for all time zones in the world. Includes: Eastern, Central, Mountain, Pacific, Alaska, and Hawaii.
         Daylight Saving Time bypass switch.
         12-hour or 24-hour display.
      Transmitter housing shall be black metal case, 16-3/4 inches (424.4mm) by 12 inches (304.8mm) by 1-7/8 inches (46.4mm) in size.
      Antenna shall be 46 inches (1168mm) high, commercial type, mounted on top center of transmitter housing. Antenna gain shall be < 2.2 dB. Antenna polarization shall be vertical.
      Transmitter housing shall incorporate a display which shall include the following:
         Time readout

AM and PM indicator if 12-hour time display is set
Day and date readout
Indicator for daylight savings or standard time
LED which shall flash red in event of reception problem
GPS reception indicator

Transmitter shall contain an internal clock such that failure of reception from the GPS will not disable the operation of the clocks.

Power supply (included)
Input: 120 volt AC 50/60 Hz, 0.4 amps.
Output: 9 volt DC, 1.5 amps.

Surge Protector/Battery Backup (included).
Input: 120 volt AC 60 Hz +/- 1 Hz.
Output: 120 volt AC, 500VA, 300 watts
Surge Energy Rating: 365 joules

3. Analog Wireless Clocks

a. Analog clocks shall be battery-operated.
b. Analog clocks shall be capable of automatically adjusting for Daylight Saving
c. Time. An on-off switch located on the transmitter shall disable this function
d. If desired time shall be automatically updated from the transmitter 6 times per day.
e. Analog clocks shall remember the time during changing of batteries.
f. Analog clock receivers shall be as follows:

Receiver sensitivity: >-110 dBm
Receiver power: 24 VAC or 120 VAC (see model #)
Antenna type: internal
Antenna gain: -7 dBd
If transmitter stops transmitting valid time signals due to power failure, the clocks will continue to function as accurate quartz clocks until a valid time signal is decoded. If signal transmission is not restored after 96 hours, the second hand will "five step" as a visual indicator that the signal has been lost. Should the clocks lose power and signal, the clocks will not function.

SECTION 3 – EXECUTION

3.01 GENERAL INSTALLATION REQUIREMENTS

A. The wiring of the system shall be executed in accordance with the drawings and the equipment manufacturer's wiring diagrams. It shall be the responsibility of contractor of the approved equipment to install the equipment and guarantee the system to operate as per plans and specifications.

B. Furnish all conduit, junction boxes, conductors, equipment plugs, terminal strips, etc., and labor to install a complete and operable system.

C. The cables within racks or cabinets shall be carefully cabled and laced with no. 12 Cord waxed linen lacing twine or ty-raps. All cables shall be numbered for identification.

D. The labor employed by the contractor shall be regularly employed in the installation and repair of the specified systems and shall be acceptable to the owner and architect to engage in the installation and service of this system.

E. The contractor shall thoroughly clean all equipment and materials. All exposed parts of the equipment, cabinets, and other equipment shall be left in a clean condition, unblemished and free of all dirt, dust, smudges, spots, fingerprints, etc., The contractor shall remove all debris and rubbish occasioned by the electronic systems work from the site. The contractor shall thoroughly clean all buildings of any dirt, debris, rubbish, marks, etc., Caused by the performance of this work.

F. The system must meet all local and other prevailing codes.

G. All equipment racks shall be bolted to the floor by the contractor once the Owner determines the exact location for each rack. The earthquake mounting brackets that come with each relay rack kit shall be screwed to studs, not drywall. All equipment shall be serviceable in the racks final location – the need to unbolt racking equipment to access or service equipment is not acceptable.

3.02 GENERAL TESTING REQUIREMENTS

A. Provide all instruments for testing and demonstrating in the presence of the owner's inspector that the frequency response is as stated in the factory data sheets. Check all circuits and wiring to verify they are free of shorts and grounds.

B. System shall be complete and properly operating prior to calling for the test. The inspector, contractor and engineer shall walk test system at district's option and contractor shall make minor satisfactory adjustments to the system in the presence of the inspector. Contractor shall coordinate the time of test with the district inspector. This test shall be performed during a time when there are no other persons on the site.

SECTION 4 - FINAL ACCEPTANCE

A. The Owner or Owner's representative may visit the site during the installation of the system to ensure that correct installation practices are being followed.

B. The Owner or Owner's representative will conduct a final job review once the contractor has finished the job. This review will take place within one week after the contractor notifies the owner.

A. Two copies of all as built drawings for all identifications shall be provided to the Owner before the owner's review.

B. The Owner or Owner's representative will review the installation and drawing prior to the system acceptance.

C. The Owner or Owner's representative may test some of the systems features to ensure that the data is correct

D. In the event that repairs or adjustments are necessary, the contractor shall make these repairs at his own expense. All repairs shall be completed within 10 days from the time they are discovered.

E. The contractor shall provide not less than eight (8) hours for site instruction of personnel in the operation and maintenance of the installed systems. This instruction time shall be divided as directed by the Owner.

END OF SECTION

C.W.Driver
BUILDERS SINCE 1919

15615 Alton Parkway, Suite 150
Irvine, CA 92618
Tel: 949.261.5100
Fax: 949.261.5167

Site: 1951 Mabury St.
Santa Ana, CA 92705
Fax 949.261.5167
Telephone 949.261.5100

Request For Information

SAUSD - John Muir Fundamental Elementary School

Mr Vern Saxe
GKKWorks
2355 Main Street, Suite 220
Irvine, CA 92614

Fax No: 619.814.1249

RFI #: PB-0001
January 09, 2012

RFI Initiated By: C.W. Driver
C.W. Driver RFI #: JRH Construction #1
RFI Importance: Normal

Subject: Hardware Sets - ADA Requirements

Question

Reference: Spec Section 08710

Hardware sets 02, 05, 08, 09, 10 and 11 note that the "Balance of hardware is existing. Replace hardware not meeting ADA requirements". More information is required on these hardware sets to determine what existing components not meeting ADA requirements need to be replaced. Please advise.

Please Respond By: 01/16/12

Transmitted By: Ryan Facer
Senior Project Engineer

Response

To determine hardware not meeting ADA requirements see attached sheet "Accessible Hardware" & hardware sets listed in spec. section 08710 - 3.7

Responded By

Name: Eric Scott

Company: GKK

Date: 01/24/2012

Accessible doors and hardware requirements below:
Handles, pulls, latches, locks, and other operating devices on accessible doors shall have a shape that is easy to grasp with one hand and does not require tight grasping, tight pinching, or twisting of the wrist to operate. Lever-operated mechanisms, push-type mechanisms, and U-shaped handles are acceptable designs. When sliding doors are fully open, operating hardware shall be exposed and usable from both sides. Hardware required for accessible door passage shall be mounted no higher than 48 in (1220 mm) above finished floor. Some disabled persons must push against a door with their chair or walker to open it. Applied kickplates on doors with closers can reduce required maintenance by withstanding abuse from wheelchairs and canes. To be effective, they should cover the door width, less approximately 2 in (51 mm), up to a height of 16 in (405 mm) from its bottom edge and be centered across the width of the door.
If a door has a closer, then the sweep period of the closer shall be adjusted so that from an open position of 70 degrees, the door will take at least 3 seconds to move to a point 3 in (75 mm) from the latch, measured to the leading edge of the door. Closers with delayed action features give a person more time to maneuver through doorways. They are particularly useful on frequently used interior doors such as entrances to toilet rooms.
The maximum force for pushing or pulling open a door shall be as follows: interior hinged doors: 5 lbf (22.2N), sliding or folding doors: 5 lbf (22.2N). Although most people with disabilities can exert at least 5 lbf (22.2N), both pushing and pulling from a stationary position, a few people with severe disabilities cannot exert 3 lbf (13.13N). Although some people cannot manage the allowable forces in this guideline and many others have difficulty, door closers must have certain minimum closing forces to close doors satisfactorily. Forces for pushing or pulling doors open are measured with a push-pull scale under the following conditions: (1) Hinged doors: Force applied perpendicular to the door at the door opener or 30 in (760 mm) from the hinged side, whichever is farther from the hinge. (2) Sliding or folding doors: Force applied parallel to the door at the door pull or latch. (3) Application of force: Apply force gradually so that the applied force does not exceed the resistance of the door.

C.W.Driver
BUILDERS SINCE 1919

15615 Alton Parkway, Suite 150
Irvine, CA 92618
Tel: 949.261.5100
Fax: 949.261.5167

Site: 1951 Mabury St.
Santa Ana, CA 92705
Fax 949.261.5167
Telephone 949.261.5100

Request For Information

SAUSD - John Muir Fundamental Elementary School

Mr Vern Saxe
GKKWorks
2355 Main Street, Suite 220
Irvine, CA 92614

Fax No: 619.814.1249

RFI #: PB-0002
January 09, 2012

RFI Initiated By: C.W. Driver
C.W. Driver RFI #: JRH Construction #2
RFI Importance: Normal

Subject: Building 6 Door Demolition

Question

Reference: 6-A-2_01; A-8.01

Demolition key not #3 on sheet 6-A-2_01 indicates to replace doors and frames. However the door schedule does not call for new doors and frames for restrooms 116 and 117. Please advise.

Please Respond By: **01/16/12**

Transmitted By: Ryan Facer
Senior Project Engineer

Response

Change key note #3 to key note #6 - "Remove existing threshold".
Doors and frames are to remain.

Responded By

Name: Eric Scott

Company: GKK

Date: 01/24/2012

C.W.Driver
BUILDERS SINCE 1919

15615 Alton Parkway, Suite 150
Irvine, CA 92618
Tel: 949.261.5100
Fax: 949.261.5167

Site: 1951 Mabury St.
Santa Ana, CA 92705
Fax 949.261.5167
Telephone 949.261.5100

Request For Information

SAUSD - John Muir Fundamental Elementary School

Mr Vern Saxe
GKKWorks
2355 Main Street, Suite 220
Irvine, CA 92614

Fax No: 619.814.1249

RFI #: PB-0003
January 09, 2012

RFI Initiated By: C.W. Driver
C.W. Driver RFI #: JRH Construction #3
RFI Importance: Normal

Subject: Site Concrete Replacement

Question

Reference: Spec Section 02750

There is no detail for the replacement of areas of site concrete. Please provide.

Please Respond By: **01/16/12** **Transmitted By:** Ryan Facer
Senior Project Engineer

Response

See attached sketch PB-ASK-1 for slab connections.

Responded By

Name: Eric Scott Company: GKK Date: 01/24/2012

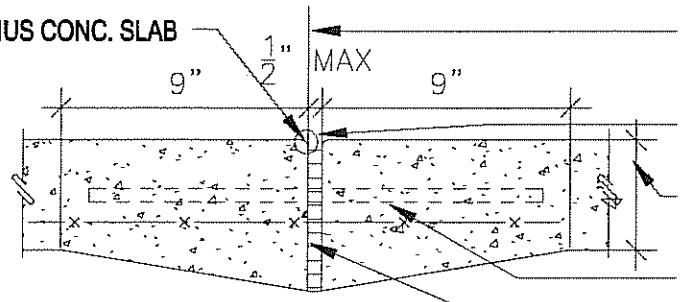

A EXPANSION JOINT (E.J.)
SIM - NO DOWELS

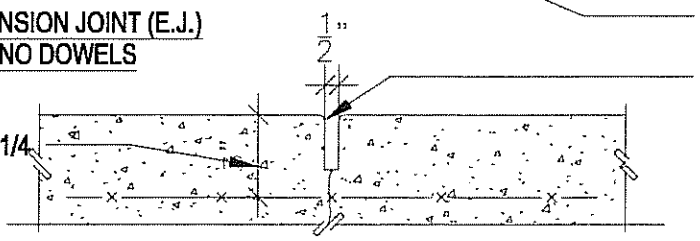

B CONTROL JOINT (C.J.)

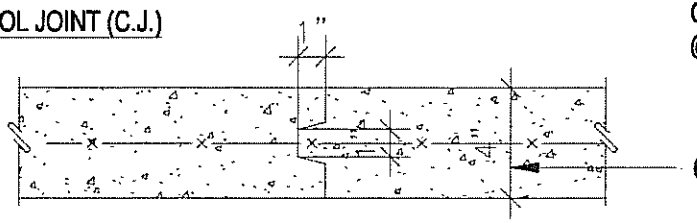

C CONSTRUCTION JOINT (K.J.)

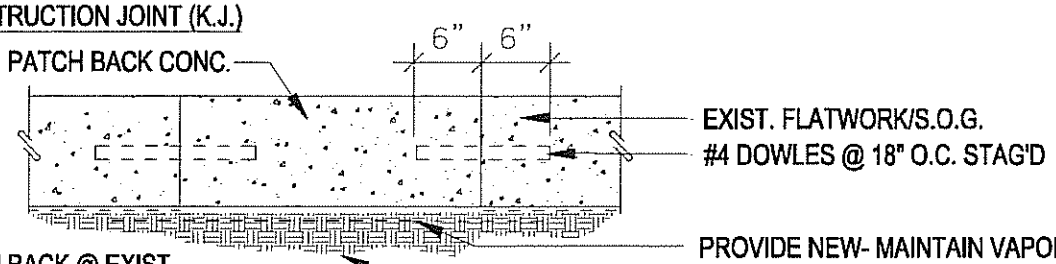

D PATCH BACK @ EXIST.

NOTES:

1. REFER TO FLOOR PLAN FOR EXP. JOINTS LOCATION.
2. SEE FLOOR PLAN AND SPECS. FOR CONC. FINISH.
3. PROVIDE EXP. JOINTS @ 25'-0" OC OR AS INDICATED ON PLANS, COORDINATE W/ SIDEWALK SLOPE PATTERN, STRUCTURAL AND CIVIL DWGS
4. PROVIDE COLORED CONCRETE FINISH AS INDICATED.
5. CONCRETE PAVING REQUIREMENTS:
   A. ALL CONCRETE PAVING SHALL BE 6" OVER 4" OF GRAVEL BASE, SEE CIVIL AND STRUCT DWGS

DIVISION OF THE STATE ARCHITECT
APPL # 04-110033
FILE #
AC FLS
SSS DATE
IDENTIFICATION STAMP

gkkworks
2355 Main Street | Suite 220
IRVINE | CA 92614
949 250 1500 | 949 955 2708 fax

LICENSED ARCHITECT
GUILLERMO AGUILAR
NO. C13165
REN.: MAY. 2013
STATE OF CALIFORNIA

Prepared By	Scale	Issue Date	Project Number
	AS NOTED	1/24/2012	10021-002-00

Project Title
DSA APPLICATION NO: 04-110033
MUIR ELEMENTARY MODERNIZATION
SANTA ANA UNIFIED SCHOOL DISTRICT

Drawing Name: SLAB JOINTS
Sheet Number: PB-ASK-1
Reference: MODIFIES SHEET A2.6 - NEW DTL

:\Santa Ana USD\10021-010_Muir Fundamental\Deliverables\CAD\A_Arch\10021_010_A-2.6.dwg, Layout1, 1/24/2012 2:31:10 PM, Bluebeam PDF

C.W.Driver
BUILDERS SINCE 1919

15615 Alton Parkway, Suite 150
Irvine, CA 92618
Tel: 949.261.5100
Fax: 949.261.5167

Site: 1951 Mabury St.
Santa Ana, CA 92705
Fax 949.261.5167
Telephone 949.261.5100

Request For Information

SAUSD - John Muir Fundamental Elementary School

Mr Vern Saxe
GKKWorks
2355 Main Street, Suite 220
Irvine, CA 92614

Fax No: 619.814.1249

RFI #: PB-0004
January 09, 2012

RFI Initiated By: C.W. Driver
C.W. Driver RFI #: JRH Construction #4
RFI Importance: Normal

Subject: Restroom SOG Patching

Question

Reference: Spec Section 03300; 15400

There is not a detail for the patching of the restroom SOG. Please provide.

Please Respond By: **01/16/12**

Transmitted By: Ryan Facer
Senior Project Engineer

Response

See attached detail PB-ASK-1

Responded By

Name: _____ Company: _____ Date: _____

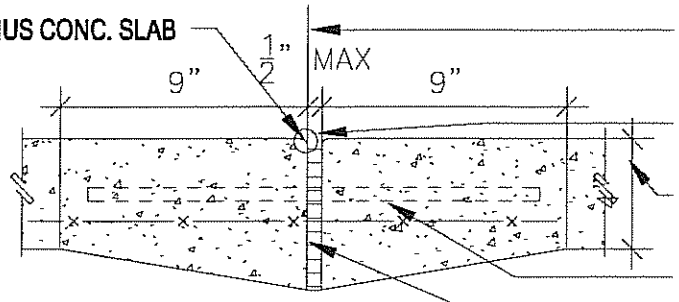

A EXPANSION JOINT (E.J.)
SIM - NO DOWELS

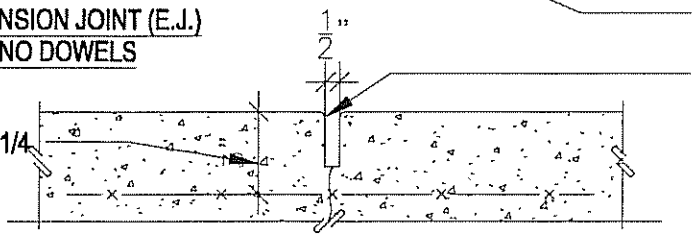

B CONTROL JOINT (C.J.)

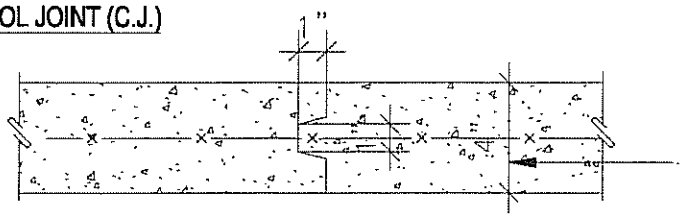

C CONSTRUCTION JOINT (K.J.)

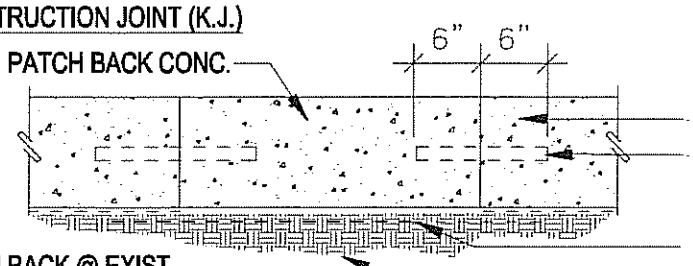

D PATCH BACK @ EXIST.

NOTES:

1. REFER TO FLOOR PLAN FOR EXP. JOINTS LOCATION.
2. SEE FLOOR PLAN AND SPECS. FOR CONC. FINISH.
3. PROVIDE EXP. JOINTS @ 25'-0" OC OR AS INDICATED ON PLANS, COORDINATE W/ SIDEWALK SLOPE PATTERN, STRUCTURAL AND CIVIL DWGS
4. PROVIDE COLORED CONCRETE FINISH AS INDICATED.
5. CONCRETE PAVING REQUIREMENTS:
   A. ALL CONCRETE PAVING SHALL BE 6" OVER 4" OF GRAVEL BASE, SEE CIVIL AND STRUCT DWGS

DIVISION OF THE STATE ARCHITECT
APPL # 04-110033
FILE #
AC FLS
SSS DATE
IDENTIFICATION STAMP

gkkworks
2355 Main Street | Suite 220
IRVINE | CA 92614
949 250 1500 | 949 955 2708 fax

LICENSED ARCHITECT
GUILLERMO AGUILAR
NO. C13165
REN.: MAY. 2013
STATE OF CALIFORNIA

Prepared By	Scale	Issue Date	Project Number
	AS NOTED	1/24/2012	10021-002-00

Project Title
DSA APPLICATION NO: 04-110033
MUIR ELEMENTARY MODERNIZATION
SANTA ANA UNIFIED SCHOOL DISTRICT

Drawing Name: SLAB JOINTS
Sheet Number: PB-ASK-1
Reference: MODIFIES SHEET A2.6 - NEW DTL

:\Santa Ana USD\10021-010_Muir Fundamental\Deliverables\CAD\A_Arch\10021_010_A-2.6.dwg, Layout1, 1/24/2012 2:31:10 PM, Bluebeam PDF

C.W.Driver
BUILDERS SINCE 1919

15615 Alton Parkway, Suite 150
Irvine, CA 92618
Tel: 949.261.5100
Fax: 949.261.5167

Site: 1951 Mabury St.
Santa Ana, CA 92705
Fax 949.261.5167
Telephone 949.261.5100

Request For Information

SAUSD - John Muir Fundamental Elementary School

Mr Vern Saxe
GKKWorks
2355 Main Street, Suite 220
Irvine, CA 92614

Fax No: 619.814.1249

RFI #: PB-0005
January 17, 2012

RFI Initiated By: C.W. Driver
C.W. Driver RFI #: Continental Flooring #1
RFI Importance: Normal

Subject: Carpet Flooring Clarifications

Question

1. Finish schedule A-8.01 call for F1 to be Lee's Faculty 4 carpet but the District's standard is Tandus Aragon Blue Shadow.
Please clarify if Lee's carpet for patching only.

2. Alternate #1 calls for new flooring in Buildings #6 and #7 but there is no specification section for new carpet or geo tile entry. Please provide flooring specifications for these buildings.

Please Respond By: 01/24/12

Transmitted By: Thanos Sakavellas
Assistant Project Manager

Response

1. Patch carpet to match existing.
2. Carpet & Geo tile spec. included.

Responded By

Name: Eric Scott Company: GKK Date: 01/24/2012

DIVISION 9 – FINISHES

SECTION 096800 - CARPET

PART 1 – GENERAL

1.01 SUMMARY OF CONSIDERATIONS AND DISTRICT CRITERIA

A. The District has established the following listed products as standards for the listed applications.

B. The selection was derived from a desire to minimize long term maintenance, establish uniform cleaning procedures throughout the District, and reduce inventory issues when emergency replacement is required.

C. The listed products each use high quality carpet yarn systems. Care should be given to acceptance of substitutes.

D. The on-going debate over moisture vapor control methods is particularly relevant in the District, given the high water table. Architect recommends using the listed methods and products in a coordinated fashion with the concrete criteria established in Section 03300 in order to minimize potential water vapor issues from developing.

E. Where water vapor contents exceed manufacturers minimum, contact manufacturer for recommended mitigation.

F. **When selected by the District, a "border" may be included in designated areas – see the plans.**

1.02 SECTION INCLUDES

A. Carpeting

B. VCTT (Vinyl Cushion Tufted Textile).

C. Accessories.

1.03 OTHER APPLICABLE SECTIONS – See also the following:

A. 096250 – Walk-off Mats including "Geo-Tile".

B. 096500 – Resilient Flooring.

1.04 WARRANTY

A. CPT-1: Provide manufacturers standard, printed 25-year, non pro-rated warranty against the following defects, for the stated period, after acceptance of installation:

1. Edge Ravel: No edge ravel based on normal use, wet and dry condition of use, and without use of seam sealers for lifetime of material.

2. Secondary Back Adhesion: The cushion and backing system will have no delamination based on normal use, for the life of the installation.

3. Tuft Bind: No edge raveling, yarn zippering or yarn pulls as determined by the non pro-rated warranty.

4. Excessive Static Electricity, defined as exceeding 3.0 Kilovolts at 20% RH and 70 degrees F per AATCC 134 for lifetime of material.

5. Manufacturers published warranty for stain release.

6. Manufacturers published warranty for colorfastness.

B. Use of chair pads shall not be a pre-condition for warranty coverage.

C. Carpeting exhibiting defects as defined shall be replaced or repaired by the manufacturer. Secondary warranties involving those other than the manufacturer are not acceptable.

1.04 CONTRACTORS GUARANTY

A. Provide guaranty, in Architect approved form, against the following defects for a period of 5 years after acceptance of installation:

1. Doming, wrinkling or delamination from substrate.

2. Separation, lifting, puckering or other seam defects.

3. Loose yarn tufts, strays or other yarn pieces at seams or edges.

PART 2 - PRODUCTS

2.01 MANUFACTURERS

A. District Standard: Characteristics of specific products, where named in this Section, are provided as "District Standard" product and are indicated to establish required level of quality, appearance and performance. The selection was derived from a desire to minimize long term maintenance, establish uniform cleaning procedures throughout the District, and reduce inventory issues when emergency replacement is required.

The District and Architect may consider comparable products by alternate manufacturers where listed, and requests for substitutions, under the provisions of Section 01340.

2.02 CARPET (CPT-1) TYPICAL UNLESS NOTED OTHERWISE

A. Collins & Aikman Floorcoverings, Inc. DBA Tandus:

1. Main office: Collins & Aikman Floorcoverings, DBA Tandus: 311 Smith Industrial Boulevard (Post Office Box 1447) Dalton, Georgia 30722-1447. Phone: 1-706-259-9711. Web: http://www.tandus.com

2. Local contact: Collins & Aikman Floorcoverings, DBA Tandus: 1231 East Dyer Road, Suite 155; Santa Ana, California 92705. Contact; Mr. Jack Vombaur, account executive or Ms. Raelene Barress, Assistant. Phone: 1-800-241-4902 x1605

B. Type: VCTT / Vinyl Cushion Tufted Textile. The wear layer will be Anton type 6.6. The backing will be vinyl cushion with a pre-applied adhesive to 100% of the backing.

C. Series/Style: C&A Powerbond.

D. Construction:

1. Minimum gauge/stitch count: 1/12 inch / 9.5 stitches per inch.

2. Wear layer minimum weight: 18 oz face weight

3. Product density: factor 10,588

4. Pile Height: 0.117 inch average

5. Wear Layer: DuPont Type 6.6, Antron Legacy and Lumina BCF Nylon with Ensure soil resistant treatment.

a. Alternate yarn manufacturers are not acceptable.

E. Backing: 6' Powerbond cushion RS

1. Primary: synthetic / non-woven.

2. Secondary: vinyl cushion Powerbond with pre-applied adhesive to 100% of the backing at the time of manufacturing.

F. Fire/Habitability Criteria

1. Critical Radiant Flux: Minimum 0.45 w/sq cm per ASTM E 648, (Class 1 per UFC Appendix IV).

2. Smoke Density: 450 or less, per ASTM E 662.

3. Static Propensity: 3.0 KV or less per AATCC 134.

G. Air quality:

1. Comply with State of Washington criteria for indoor air criteria, including VOC and particle emissions or approved equivalent test standard.

2. No detectable levels of formaldehyde or 4-PC.

H. Color: Carpets manufactured by & Aikman Floorcoverings, DBA Tandus. The following four (4) color choices have been previously selected by the District as part of their "standard" color pallet to establish uniformity and to reduce inventory due to emergency replacement. Carpet shall be the following unless otherwise directed:

1. Blue: C&A "Aragon" *Blue Shadow*: 6' Powerbond cushion RS

2.03 **BORDER** CARPET (CPT-2) **To be determined, by District, per project – as designated on plans.**

A. Collins & Aikman Floorcoverings, Inc. DBA Tandus:

1. Main office: Collins & Aikman Floorcoverings, DBA Tandus: 311 Smith Industrial Boulevard (Post Office Box 1447) Dalton, Georgia 30722-1447. Phone: 1-706-259-9711. Web: http://www.tandus.com

2. Local contact: & Aikman Floorcoverings, DBA Tandus: 1231 East Dyer Road, Suite 155; Santa Ana, California 92705. Contact; Mr. Jack Vombaur, account executive or Ms. Raelene Barress, Assistant. Phone: 1-800-241-4902 x1605

B. Series/Style: C&A/Tandus: Blue Shadow #160119

C. Face Construction:

1. Minimum gauge/stitch count: 1/13 inch / 12 stitches per inch.

2. Wear layer minimum weight: 18 oz face weight

3. Tuft Density: 153.6 tufts/sq in

4. Pile Height: 0.135 inch average

5. Pile Thickness: 0.083 inch.

6. Density factor: 10,410 oz/cu yd

7. Fiber System: Dynex SD / Dynex Nylon

8. Dye method: 50% solution dyed / 50% yarn dyed.

9. Soil/Stain Protection: Ensure

10. Primary Tufting Substrate: Synthetic non-woven.

11. Pattern repeat: N/A

D. Fire/Habitability Criteria

1. Surface Flammability: Passes CPSC FF 1-70 (ASTM D-2859)

2. Flooring Radiant Panel: Class 1 - mean average CFR: 0.45 w/sq cm or higher (ASTM E-648)

E. Color: To be determined by the Architect, from the Contractor's submittal. Border only included where District determines a part of the project scope. See contract documents if designated "carpet" areas are to receive a border.

2.04 OTHER MATERIALS

A. Provide all other materials, not specifically described but required for complete and proper installation of this work, as selected by the contractor and subject to the approval of the Architect.

PART 3 – EXECUTION

3.01 INSTALLATION AND PLACEMENT CONSIDERATIONS

A. Moisture Testing

1. Conduct anhydrous calcium chloride testing using prepackaged kit systems approved by flooring manufacturer.

2. Provide test at coverage rate required by flooring manufacturer, with minimum of 3 tests/first 1,000 square feet and 1 test per each 1,000 square feet after. Distribute uniformly throughout building. Prepare map or diagram of test locations in each building.

3. Conduct one set of tests 60 days prior to scheduled flooring installation. Submit test results to Architect within 48 hours of test receipt.

4. Conduct second set of tests 14 days prior to scheduled flooring installation. Submit test results to Architect within 48 hours of test receipt.

5. Submit testing to Architect prior to beginning slab preparation or flooring work.

B. Evaluate floor surface. Prepare surface and apply filler to all floor surfaces exhibiting the following characteristics: Cracks, gouges or holes exceeding 1/16 inch in any dimension.

1. Cracks with adjacent surfaces exceeding 1/16 inch in height.

2. All expansion, weakened plane or construction joints.

3. All surfaces exhibiting rough or abraded texture exceeding 1/16 inch amplitude. All surfaces with gap exceeding 3/16 inch under 10 foot metal straight edge.

C. Filler Installation:

1. Prepare existing concrete substrate as recommended by filler manufacturer, including mechanical shot-blasting or equivalent.

2. Acid etching is not acceptable.

3. Prepare existing cracks in substrate as recommended by manufacturer.

4. Apply filler and trowel to leave a smooth, flat, hard surface.

5. Prohibit traffic from area until filler is cured. Vacuum clean substrate.

D. Floor Preparation:

1. Remove all outlet floor plates and utility covers, doorstops, and similar components. Label and store for re-installation. Note floor-mounted doorstops shall not be reinstalled. Contact the Architect, when found, to determine the appropriate alternate wall-mounted door stop.

2. Remove all curing compounds, waxes, grease, paint and other coatings by Architect approved means. Vacuum substrate clean.

3. Apply primers as recommended by carpet manufacturer.

E. Prohibit traffic from carpet areas for 24 hours after installation.

F. Provide non-staining, slip resistant traffic path protection until final cleaning.

END OF SECTION

DIVISION 9 – FINISHES

SECTION 096250 – WALK-OFF MAT

PART 1 – GENERAL

1.01 SUMMARY OF CONSIDERATIONS AND DISTRICT CRITERIA

A. The District has established the following listed product as a standard for the listed applications.

B. The selection was derived from a desire to minimize long term maintenance, establish uniform cleaning procedures throughout the District, and reduce inventory issues when emergency replacement is required.

1.02 SECTION INCLUDES

A. Permanent walk-off entrance mats.

PART 2 - PRODUCTS

2.01 WALK-OFF MAT

A. "Geo Tile": Material Geometric Tile Triad Mat Series, manufactured by Collins &Aikman Floorcoverings Inc, DBA Tandus: style #00979 modular tile walk-off mat.

B. Size: 18" x 18" (tiles).

C. Face construction:

1. Construction: Molded reinforced needlepunch textile.

2. Texture / pattern: Rubber reinforced Geometric pattern.

3. Pile height: 0250 inch (6.4 mm).

4. Fiber system: 100% premium polypropylene.

5. Dye method: Solution dyed.

6. Backing: Special non-thermoplastic Tri-Grip cleated SBR.

7. Weight: 135.0 +/- 5%.

D. Product testing / information:

1. Surface flammability: Pass CPSC FF 1-70 (ASTM D-2859)

2. Flooring radiant panel: Class 2 (mean average CRF: 0.22 w/sq cm to 0.44 w/sq (ASTM E-648)

2.02 MANUFACTURER:

A. Collins &Aikman Floorcoverings Inc, DBA Tandus:

1. Main office: Collins &Aikman Floorcoverings Inc, DBA Tandus: 311 Smith Industrial Boulevard (Post Office Box 1447) Dalton, Georgia 30722-1447. Phone: 1-706-259-9711. Web: http://www.tandus.com

2. Local contact: Collins &Aikman Floorcoverings Inc, DBA Tandus: 1231 East Dyer Road, Suite 155; Santa Ana, California 92705. Contact; Mr. Jack Vombaur, account executive or Ms. Raelene Barress, Assistant. Phone: 1-800-241-4902 x1605

B. or approved equivalent if determined acceptable upon review of Contractor's submittal.

PART 3 – EXECUTION

3.01 INSTALLATION AND PLACEMENT CONSIDERATIONS

A. Installation:

1. Product to be installed using a full-spread solvent-free releasable or permanent adhesive, as recommended by the manufacturer.

2. Matting is to be cut "net" to the carpet material.

3. Quarter inch silicone bead is to be applied to the carpet edge where mat meets carpet.

4. Snap down reducer / transition strip is to be installed where matting material meets the threshold (door entryway).

B. Placement:

1. Product shall be placed where indicated on the drawings and/or as required, by the District. Walk off mat to be provided at each building entrance, other than direct building entrance to classrooms. Walk off mat to be sized to the width of the door(s) / opening.

C. Matting applications: Where carpet material meets exterior doorways.

1. Exterior single door entryway will have a 4.5' x 4.5' mat area.

2. Exterior double door entryway will have a 7.5' x 9' mat area.

3. Exterior double door corridor entryway will have a 7.5' x 18' mat area.

D. Floor Preparation:

1. Clean floor surface for proposed matt prior to installation.

2. Install product per manufacturer's recommendations

END OF SECTION

C.W.Driver
BUILDERS SINCE 1919

15615 Alton Parkway, Suite 150
Irvine, CA 92618
Tel: 949.261.5100
Fax: 949.261.5167

Site: 1951 Mabury St.
Santa Ana, CA 92705
Fax 949.261.5167
Telephone 949.261.5100

Request For Information

SAUSD - John Muir Fundamental Elementary School

Mr Vern Saxe
GKKWorks
2355 Main Street, Suite 220
Irvine, CA 92614

Fax No: 619.814.1249

RFI #: PB-0006
January 25, 2012

RFI Initiated By: C.W. Driver
C.W. Driver RFI #: Continental Flooring #1
RFI Importance: Normal

Subject: Fire Alarm System Clarification

Question

Specification Reference: 283100

Please confirm the specified fire alarm system to be provided.

Please Respond By: 02/01/12

Transmitted By: Thanos Sakavellas
Assistant Project Manager

Response

Provide fire alarm system per the District Standards, see attached specification.

Responded By

Name: Vern Saxe | Company: GKKWorks | Date: 1/25/2012

You are to proceed with the instructions contained herein. If these instructions involve cost or schedule impacts, please notify C.W. Driver within (7) days of receipt and await direction before proceeding.

DIVISION 28 – ELECTRONIC SAFETY & SECURITY

SECTION 283100 - INTELLIGENT FIRE DETECTION AND ALARM SYSTEM

PART 1 - GENERAL

1.01 SECTION INCLUDES

A. Manual and automatic fire alarm and smoke detection system.

1.02 CONTRACTOR QUALIFICATIONS

A. All work specified in this Section shall be performed (furnished, installed and connected) by a Notifier Engineered Systems Company. The fire alarm contractor shall provide the following documentation to show compliance with contractor qualifications. The documents shall be bound, indexed in the order listed below and provided during the submittal process. Equipment order, release or installation shall be not be placed without stamped approvals from the Project Architect.

1. Contractor's License: A copy of the electronics contractor's valid State of California License.

2. Proof of Experience: Proof that the fire alarm contractor has been regularly engaged in the business of fire alarm contracting consisting of, but not limited to, engineering, fabrication, installation, and servicing of fire alarm systems of the type specified herein for at least the past ten (10) consecutive years. Provide a statement summarizing any pending litigation involving any officer or principal of/or the company, the nature of the litigation and what effect the litigation may carry as it relates to this work in the worst case scenario. Non-disclosure of this item, if later discovered, may result, at the Owner's discretion, in the contractor bearing all costs and any cost related to associated delays in the progress of the work.

3. Insurance Certificates: Copy of fire alarm contractor's current liability insurance and state industrial insurance certificates in conformance with the contract documents.

4. Project List: A List containing at least ten (10) California installations completed within the last five (5) years by the fire alarm contractor that are comparable in scope and nature to that specified in the contract document.

5. Service Capability: Documentation indicating in detail that the fire alarm contractor has competent engineering, installation, service personnel and facilities with reasonable stock of service parts within 100 air miles of the job site.

6. Authorization Letters: Letters from the fire alarm equipment manufacturer stating that the fire alarm contractor is the Factory Authorized Distributor, and is trained and certified for the equipment he proposes to use on this project, and is licensed to purchase and install that software required to provide the specified functions.

7. Certification:

a. Proof that the fire alarm contractor is Underwriters Laboratories, Inc. (UL) listed under the classification of "PROTECTIVE SIGNALING SERVICES-LOCAL, AUXILIARY, REMOTE STATION AND PROPRIETARY (UUJS).

b. Copy of the following (NICET) Certificates. Proof that the certificate holders are a part of the fire alarm contractor's local facility servicing this project and will be actively involved in this project.

1) Certified Technologist or Registered Fire Protection Engineer.

2) Technician Level 4 minimum of (1)

8. Proof of Trained Personnel: Documentation that the fire alarm contractor has on staff personnel factory-trained and certified for the equipment proposed for this project. Also, a statement that personnel meeting these qualifications are in the local facility, and will be maintained at that facility throughout the project and the warranty period.

1.03 DESCRIPTION

A. This section of the specifications included that furnishing, installation, and connection of the microprocessor controlled, intelligent reporting fire alarm equipment required to form a complete coordinated system ready for operation. It shall include, but not be limited to, alarm initiating devices, alarm notification appliances, control panels, auxiliary control devices, annunciators, power supplies, and wiring as shown on the drawings and specified herein.

B. The fire alarm system shall comply with requirements of NFPA Standard No. 72 for protected premised signaling systems, except as modified and supplemented by this specification. The system shall be electrically supervised and monitor the integrity of all conductors.

C. The accepted District-standard system is that of **Notifier.** Substitutions of equal product may be considered when requested as a substitution and presented as equal or better than District-standard.

1.04 CODES

A. The installation shall be made in accordance with the drawings, specification and the following:

1. National Electrical Code, Article 760

2. National Fire Protection Association Standards

3. California State Fire Marshall

4. U.L. 1971

5. Local Codes and Authorities having jurisdiction

6. Codes as listed on the drawings.

B. The system including all components shall be listed by the State Fire Marshal and Underwriters Laboratories Inc. for use as a fire protective signaling system.

1.05 APPROVALS

A. The system must have proper listing and/or approval from the following nationally recognized agencies:

1. UL Underwriters Laboratories, Inc.
2. CSFM California State Fire Marshal
3. FM Factory Mutual
4. ISO International Standards Organization

B. The Fire Alarm Contractor shall submit shop drawings to the Project Architect before commencing work.

1.06 RELATED SPECIFICATIONS

A. Basic Electrical Materials Section.

B. Mechanical and Fire Protection Sections.

C. Interface to Special Extinguishing Systems.

1.07 SCOPE

A. Provide a new intelligent reporting, microprocessor controlled fire detection system. It shall be installed in accordance with the specifications and drawings.

B. Provide all hardware, software, programming tools and documentation necessary to modify the fire alarm system on site. Modification includes addition and deletion of devices, circuits, zones and changes to system operation and custom label changes for devices or zones. The system structure and software shall place no limit on the type or extent of software modifications on-site.

C. All required special programming equipment shall be furnished by the fire alarm contractor, turned over to the District and shall remain on site and shall be covered during the warranty period.

D. Basic Performance:

1. Alarm, trouble and supervisory signals from all intelligent reporting devices shall be encoded onto a (Class B) signaling line circuit.

2. Initiation device circuits shall be wired (Class B).

3. Indication appliance circuits shall be wired (Class B).

4. Digitized electronic signals shall employ check digits or multiple polling.

5. A Single ground of open on any system signaling line circuit, initiating device circuit, or indicating appliance circuit shall indicate a trouble condition at the control panel.

6. Alarm signals arriving at the main FACP shall not be lost following a power failure (or outage) until the alarm signal is processed and recorded.

E. Basic System Functional Operation: When a fire alarm condition is detected and reported by one of the system initiating devices or appliances, the following functions shall immediately occur:

1. The system Alarm LED shall flash.

2. A local signal in the control panel shall sound.

3. Both INA Network Annunciators (new and existing east campus) display shall indicate all information associated with the Fire Alarm condition, including the type of alarm point and its location within the protected premises.

4. Printing and history storage equipment shall log the information associated with Fire alarm Control Panel condition, along with time and date of occurrence.

5. All system output programs assigned via control by event equations to be activated by the particular point in alarm shall be executed, and the associated System Outputs (alarm indicating appliances an/or relays) shall be activated.

F. Circuiting Guidelines:

1. All system smoke detectors shall be of the Addressable Analog type. Although each individual device point number and message shall be displayed on the LCD, the initiating devices shall be zoned as follows to provide the appropriate indication on the LED Annunciator.

2. Provide one alarm initiating zone per device as shown on the plans and annunciator(s).

   a. Manual stations per floor and building.

   b. Area smoke/heat detectors per floor and building.

   c. Duct mounted smoke detectors per floor and building.

   d. Special Extinguishing Systems.

   e. Elevator recall and power disconnect.

1.08 SUBMITTALS

A. Coordination Drawings: Prepare coordination drawings in accordance with the provisions in Section 012500.

B. The construction documents have been designed based on School District Standards. The system shown on the drawings is a Notifier networked system.

C. Provide all documentation as required in Section 1.02.

D. Provide shop drawing containing the following but not limited to:

   1. Riser Diagram.

   2. Typical Device Wiring Diagram.

   3. Wire Legend.

   4. Battery Calculation for each control panel, power supply, field power supply and network annunciator.

   5. Worst Case Voltage drop for each circuit type per building.

   6. Scaled floor plans showing all conduits, sizes, quantity of conductors.

   7. Mounting Height of each devices and back box requirement.

   8. Zoning and address description legend.

E. Provide product data booklets with the following but not limited:

   1. Wire.

   2. Battery Calculation for each control panel, power supply, field power supply and network annunciator.

   3. Size of Batteries to be used in each panel.

4. Worst Case Voltage drop for each circuit type per building.

5. CSFM listing sheet for each component.

1.09 INSTALLATION COMPANY

A. The fire alarm contractor shall be a UL listed company under the UL classification of (UUJS). The installation company shall UL certify this installation.

B. The fire alarm contractor shall have a NICET Certified Engineering Technologist and Technicians on staff in their facility directly involved with this project to ensure technical expertise to this project and adherence with these specifications.

C. The fire alarm contractor shall maintain sufficient stock on hand and have a fully equipped service organization capable of guaranteeing response time within 8 hours of service calls, 24 hours a day, 7 days a week to service completed systems.

D. Equipment, wire and materials shall only be installed by the fire alarm contractor.

E. The fire alarm contractor shall provide, install and test all equipment related to this section.

PART 2 - PRODUCTS

2.01 GENERAL EQUIPMENT AND MATERIAL REQUIREMENTS

A. All equipment shall be new and unused. All components and systems shall be designed for uninterrupted duty. All equipment, materials, accessories, devices, and other facilities covered by this specification or noted on contract drawings and installation specifications shall be the best suited for the intended use and shall be provided by a single manufacturer or if provided by different manufacturers, recognized as compatible by both manufacturers.

2.02 EQUIPMENT MANUFACTURERS

A. The Fire Alarm System shall be limited to the following manufacturers and suppliers:

1. Notifier

2. Silent Knight

3. Approved equal or better.

B. To ensure that compatibility and continuity is maintained throughout the existing School District, no other manufacturers or system suppliers will be considered.

C. Shall be ISO 9001 certified.

2.03 EQUIPMENT MANUFACTURERS

A. Description: Provide a NFS model #3030 Intelligent Fire Detection and Alarm System as indicated on the plans.

B. Mechanical Design:

1. The control panel shall be housed in a UL cabinet designed for mounting directly to a wall or vertical surface. The back box shall be suitable for surface or flush mounting.

2. The door shall provide a key lock and shall include a transparent opening for viewing of all indicators.

C. System Capacity and General Operation:

1. Control panel shall be capable of accommodating all devices shown on the drawing and additional 50% initiating and alarm devices.

2. The Fire Alarm Control Panel shall include a full featured operator interface control and annunciation panel that shall include a backlit Liquid Crystal Display, individual, color coded system status LED's, and an alphanumeric keypad for the Field Programming and Control of the Fire Alarm System.

3. All programming or editing of the program in the system shall be achieved without special equipment and without interrupting the alarm monitoring functions of the Fire Alarm Control Panel.

4. The FACP shall provide the following features: Drift Compensation to extend detector accuracy over life. Sensitivity Test, meeting requirements of NFPA 72, Maintenance Alert Verification, with verification counters. PAS pre-signal, meeting NFPA 72 requirements. Rapid manual station reporting (under 2 seconds). Non-Alarm points for general (non-fire) control. Periodic Detector Test, conducted automatically by software. Pre-alarm for advanced fire waning. Counting "cross-zone" options. March time and temporal coding options. Walk Test, with check for two detectors set to same address. Security Monitor Points, meeting requirements of UL 1076. Control By Time for non-fire operations, with holidays. Day/Night automatic adjustment of detector sensitivity. Device Blink Control for sleeping areas.

D. Central Microprocessor:

1. The Microprocessor unit shall communicate with, monitor, and control all external interfaces with the control panel. It shall include EPROM for system program storage; non-volatile memory for building-specific program storage; and a "watch dog" timer circuit to detect and report microprocessor failure.

2. The Microprocessor unit shall contain and execute all control by event programs for specific action to be taken if an alarm condition is detected by the system. Suck control by event programs shall be held in non-volatile programmable memory, and shall no be lost even if system primary and secondary power failure occurs.

3. The Microprocessor Unit shall also provide a Real Time Clock for time annotation of system displays, printer, and history file. The Time of Day and date shall not be lost if system primary and secondary power supplies fail. The Real Time Clock may also be used to control non-fire functions at programmed time-of-day, day-of-week, and day-of-year.

E. Display:

1. The Display shall provide all the controls and indicators used by the system operator and may also be used to program all system operational parameters.

2. The Display shall include status information and custom alphanumeric labels for all Intelligent Detectors, Addressable Modules, and Software zones.

3. The Display shall provide an 80 character back-lit alphanumeric Liquid Crystal Display (LCD). It shall also provide Light Emitting Diodes (LED's), that will indicate the status of the following system parameters: AC POWER, SYSTEM ALARM, SYSTEM TROUBLE, SIGNAL SILENCED, SUPERVISORY, and PRE -ALARM.

4. The Display shall provide key touch keypad with control capability to command all system functions, entry of any alphabetic of numeric information, and field programming. Two different password levels shall be provided to prevent unauthorized system control or programming.

5. The Display shall include the following operator functions: SIGNAL SILENCE, RESET, DRILL, and ACKNOWLEDGE.

F. SLC Loop Interface: The SLC Interface shall provide power to, and communicate with, all of the Intelligent/Addressable Detectors and Addressable Modules over a single pair of wires. This SLC Loop shall be capable of operation as NFPA Style 4, Style 6, or Style 7.

G. Serial Interfaces:

1. An EIA-232 interface between the Fire Alarm Control Panel and UL Listed Electronic Data Processing (EDP) peripherals shall be provided (1AM-WF).

2. The EIA-232 interface shall allow the use of printers, CRT monitors, and PC compatible computers.

3. The EIA 485 port for the serial connection of the optional Annunciators and remote LCD displays shall be provided.

4. The EIA-485 interface may be used for network connection to a Proprietary Receiving Unit.

H. Field Charging Power Supply: The FCPS is a device designed for use as either a remote 24 volt power supply or used to power Notification Appliances.

1. The FCPS shall offer up to 6.0 amps (4.0 amps continuous) of regulated 24 volt power. It shall include and integral charger designed to charge 7.0 amp hour batteries and to support 24-hour standby.

2. The Field Charging Power Supply shall have two input triggers. The input trigger shall be a Notification Appliance Circuit (from the fire alarm control panel) or a relay. Four outputs (two Style Y or Z and two style Y) shall bee available for connection to the Notification devices.

3. The Field Charging Power Supply shall include the ability to delay the AC fail delay per 1996 NFPA requirements.

4. Provide quantity sufficient for a complete and operable system with no voltage drop to a signal device exceeding 8%.

I. Printer:

1. Printers shall be of the automatic type, printing code, time, date, location, category, and condition.

2. The Printer shall provide hard copy printout of all changes in status of the system and shall time stamp such printouts with the current time of day and date. The printer shall be standard carriage with 80 characters per line and shall use standard pin feed paper.

3. The printer shall be enclosed in a separate cabinet suitable for placement on a desk top or table. The printer shall communicate with the control panel using an interface complying with Electrical Industries Association standard EIA 232D. Power to the printer shall be 120 VAC 60 Hz.

J. Field Programming:

1. The system shall be programmable, configurable and expandable in the field without the need for special tools or electronic equipment and shall not require field replacement of electronic integrated circuits.

2. All programming may be accomplished through the standard FACP keypad.

3. All field defined programs shall be stored in non volatile memory.

4. The programming function shall be enabled with a password that may be defined specifically for the system when it is installed. Two levels of password protection shall be provided in addition to a key-lock cabinet. One level is used for status level changes such as zone disabled or manual on/off commands. A second (higher-level) is used for actual change of program information.

5. A special program check function shall be provided to detect common operator errors.

6. An Auto-Program (self-learn) function shall be provided to quickly program initial functions and make the system operational.

7. An off-line programming function, with batch upload/download, shall also be provided.

2.04 SYSTEM COMPONENTS

A. Main Fire Alarm Control Panel (FACP)

1. N Model #3030

2. Control Panel enclosure.

B. Programmable Electronic Horns: (Indoor/Outdoor)

1. Electronic horns shall operate on 24 VDC nominal.

2. Shall be suitable for mounting on the wall or ceiling.

3. Shall be semi-flush or surface mounted as shown on plans.

4. Flush mounted devices on the exterior of buildings; device shall be installed in a (finish red) back box with a Soundolier VP-161 cover.

5. Manufacturer: Gentex-GX90-4 (mini-horn), system sensor – MA12/240 (horn)

C. Strobe Lights:

1. Shall operate on 24 VDC nominal.

2. Shall meet the requirements of the ADA and UL 1971.

a. The maximum pulse duration shall be 2/10ths of one second

b. Intensity shall be as specified on the drawings.

c. The flash rate shall be one flash per every second.

d. The appliance shall be placed 80 inches to bottom of device above the highest floor level within the space, or 6 in below the ceiling, which ever is the lower.

e. Candela rating shall be as required per each space.

3. Manufacturer: Gentex GES series.

D. Audible/Visual Combination Devices:

1. Shall meet the applicable requirements of Section A listed above for audibility.

2. Shall meet the requirements of Section B listed above for visibility.

3. Audible and visual devices shall operate on separate circuits.

4. Manufacturer: Gentex GES series

E. Addressable Manual Stations:

1. Addressable Manual Stations shall be provided to connect to the Fire Alarm Control Panel Signaling Line Circuit (SLC) Loops.

2. All operated stations shall have a positive, visual indication of operation that cannot be reset without the use of a key.

4. Stations shall be suitable for surface mounting, or semi-flush mounting as shown on the plans, and shall be installed at 48 inches above the finished floor.

5. Manufacturer: Notifier NBG-12LX or current equivalent

F. Intelligent Photoelectric Smoke Detectors: (Low Profile)

1. Smoke detectors shall be intelligent and addressable devices, and shall connect with two wires to one of the Fire Alarm Control Panel Signaling Line Circuit loops.

2. The detectors shall use the photoelectric (light-scattering) principal to measure smoke density and shall, on command from the control pane, send data to the panel representing the analog level of smoke density.

3. The detector shall be ceiling mount and shall include a twist lock base.

4. The detector sensitivity shall be set through the Fire Alarm Control Panel, and shall be adjustable in the field through the field programming of the system. Sensitivity may be automatically adjusted by the panel on a time-of-day basis.

6. Detectors located above finished ceiling or in areas which are not readily visible shall be provided with remote indicator LED's.

7. Manufacturer: FSP-851 or current equivalent.

G. Intelligent Heat Detectors

1. Heat Detectors shall be Intelligent and Addressable devices, and shall connect with two wires to one of the Fire Alarm Control Panel Signaling Line Circuits.

2. The detectors shall use and electronic sensor to measure thermal conditions caused by a fire.

3. The detectors shall be ceiling mount and shall include a twist lock base.

4. Detectors located above finished ceiling or in areas which are not readily visible shall be provided with remote indicator LED's.

5. Manufacturer: FST-851

H. Duct Smoke Detectors:

1. In-Duct Smoke Detector Housing shall be completed with an Intelligent Photoelectric Sensor, that provides continuous analog monitoring and alarm verification from the panel.

2. When sufficient smoke is sensed, and alarm signal is initiated at the FACP, and appropriate action taken to shut down air handling systems.

3. Detectors located above finished ceiling or in areas which are not readily visible shall be provided with remote indicator LED's.

4. Manufacturer: FSP-851

I. Monitor Module:

1. Addressable Monitor modules shall be provided to connect one supervised IDC zone of conventional Alarm Initiating Devices (any NO. dry contact device) to one of the Fire Alarm Control Panel Signaling Line Circuit (SLC) Loops.

2. The Monitor Module shall mount in a 4-inch square, 2 1/8" deep electrical box.

J. Control Module:

1. Addressable Control Modules shall be provided control functions with Form "C" contracts.

2. The Control Module shall mount in a 4-inch square 2 1/8" deep electrical box.

K. Network Annunciator:

1. Furnish and install an alphanumeric, liquid crystal display, annunciators.

2. Shall be capable of displaying each individual addressable point. Minimum point capacity shall be not less than 200,000 points.

3. Provide a separate power supply and battery system for this annnunciator.

2.05 BATTERIES

A. Battery:

1. Shall be Gel-Cell type.

2. Battery shall have sufficient capacity to power the fire alarm system for not less than twenty-four hours plus five minutes of alarm upon a normal AC power failure.

3. The batteries are to be completely maintenance free.

2.06 CONDUIT AND SURFACE RACEWAY

A. All conduit, surface raceways, outlet boxes, junction boxes, pull boxes, terminal cabinets, and similar devices required in this section of the work shall be provided under Division 16000 and as shown on drawings.

B. Conduit and surface raceways shall comply with the requirements of Sections as described in the applicable specification sections.

C. Conduit shall not enter the Fire Alarm Control Panel, or any other remotely mounted Control Panel equipment or backbox, except where conduit entry is specified by the FACP manufacturer.

2.07 WIRE

A. All low voltage wire required in this section shall be furnished and installed by the fire alarm contractor.

B. All wire shall be installed in conduit. Wiring installed in underground conduits shall be approved for wet applications in accordance with the National Electric Code.

C. All fire alarm system wiring shall be new.

D. Wiring shall be in accordance with local stated and national codes (e.g., CEC Article 760) and as recommended by the manufacturer of the fire alarm system. Number and size of conductors shall be as recommended by the fire alarm system manufacturer, but not less than 14 AWG for Initiating Device Circuits and Signaling Line Circuits, and 12 AWG for Indicating Appliance Circuits.

E. All wire and cable shall be listed and/or approved by a recognized testing agency for use with a protective signaling system.

F. Wiring used for the multiplex communication loop shall be 18AWG twisted and shielded and installed in conduit. The system shall permit use of IDC and IAC wiring in the same conduit with the communication loop.

G. All field wiring shall be completely supervised. In the event of a primary power failure, disconnected standby battery, removal of any internal modules, or any open circuits in the field wiring; a trouble signal will be activated until the system and its associated field wiring are restored to normal condition.

2.08 TERMINAL CABINETS AND JUNCTION BOXES

A. All boxes and cabinets shall be UL listed for their use and purpose.

B. Terminal cabinets shall comply with the requirements of Section 16160 Terminal Cabinets.

C. Provide terminal blocks for all conductors entering and/or exiting each terminal cabinet.

PART 3 - EXECUTION

3.01 INSTALLATION

A. The entire system shall be installed in a workmanlike manner in accordance with approved manufacturer's manuals and wiring diagrams. The contractor shall furnish all wiring, conduit, outlet boxes, junction boxes, terminal cabinets and similar devices necessary for the completed installation..

B. Installation of conduit, outlet boxes, junction boxes, terminal cabinets, special back boxes and similar devices shall comply with the requirements of Division 16000 sections.

C. All conduit, junction boxes, conduit supports and hangers shall be concealed in finished areas an may be exposed in unfinished areas. Smoke detector heads shall not be installed prior to the system programming and test period. If construction is on going during this period, measures shall be taken to protect smoke detectors from contamination and physical damage.

D. All fire detection and alarm system devices, control panels and remote annunciators shall be flush mounted when located in finished areas and may be surface mounted when located in unfinished areas. Verify with the Project Architect prior to any surface mounted installations.

E. All penetrations of floor slabs and fire walls, shall be fire stopped in accordance with the electrical specifications.

F. Duct mounted Smoke Detectors shall be furnished and wired by this Contractor and installed by the Mechanical Contractor. All shutdown and interface wiring shall be performed by the Electrical Contractor. All air pressure differential testing shall be performed by the Mechanical/Air Balance Contractor.

3.02 DOCUMENTATION

A. Contractor shall provide "as-built" drawings.

B. Contractor shall submit the NFPA Certificate of Compliance to the School District, the local fire official and California State Fire Marshal.

3.03 TRAINING

A. The manufacturer shall provide factory training to the two technicians from the School District. These technicians shall be trained and certified as manufacturer's certified technicians to perform any work on the system after the installation of the system.

END OF SECTION